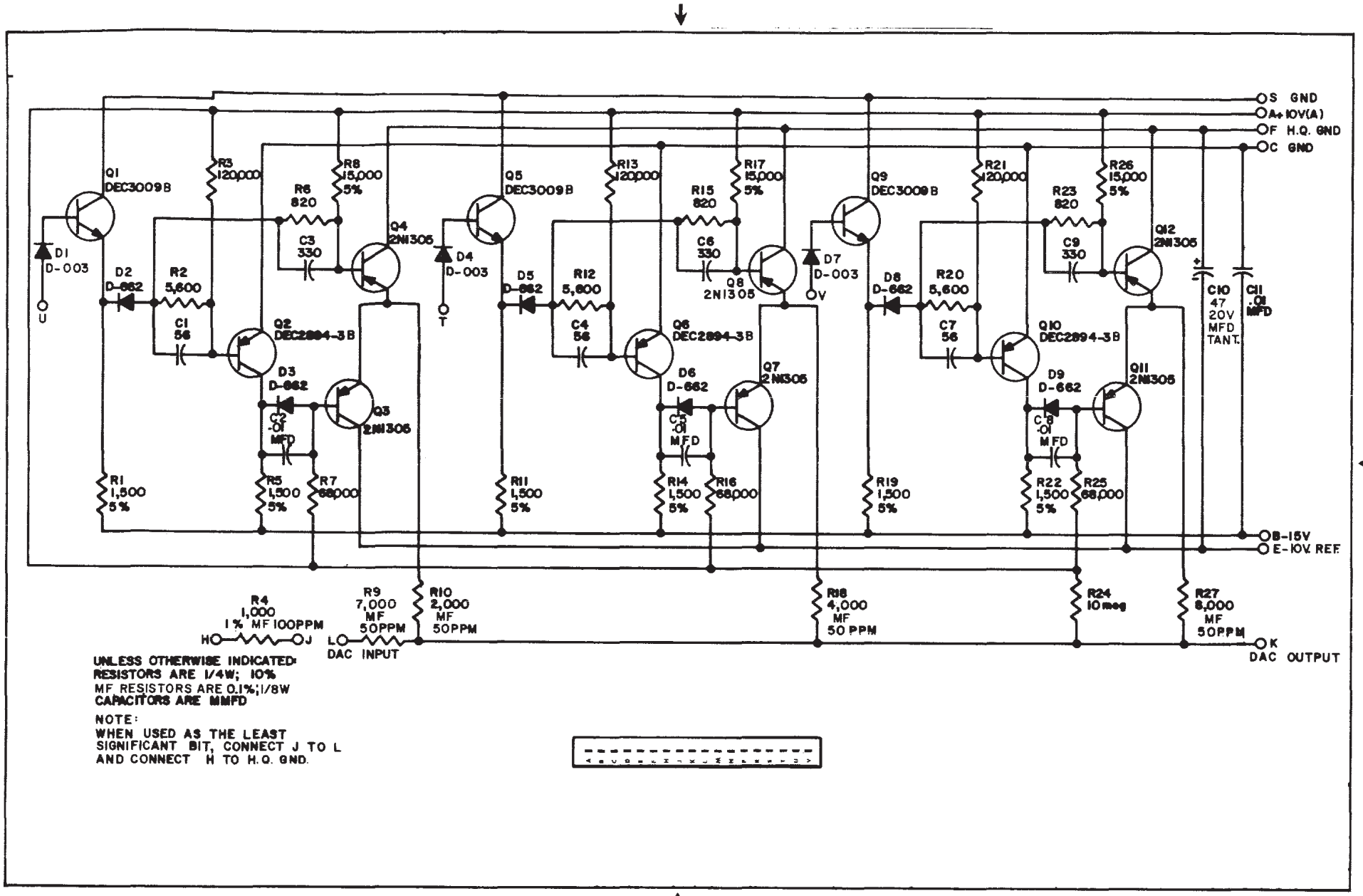

A601-0-1 3 Bit DAC