THIS SCHEMATIC IS FU... ONLY FOR TEST AND MAINTENANCE PURPOSES. THE CIRCUITS ARE PROPRIETARY IN NATURE AND SHOULD BE TREATED ACCORDINGLY.
COPYRIGHT 1969 BY DIGITAL EQUIPMENT CORPORATION

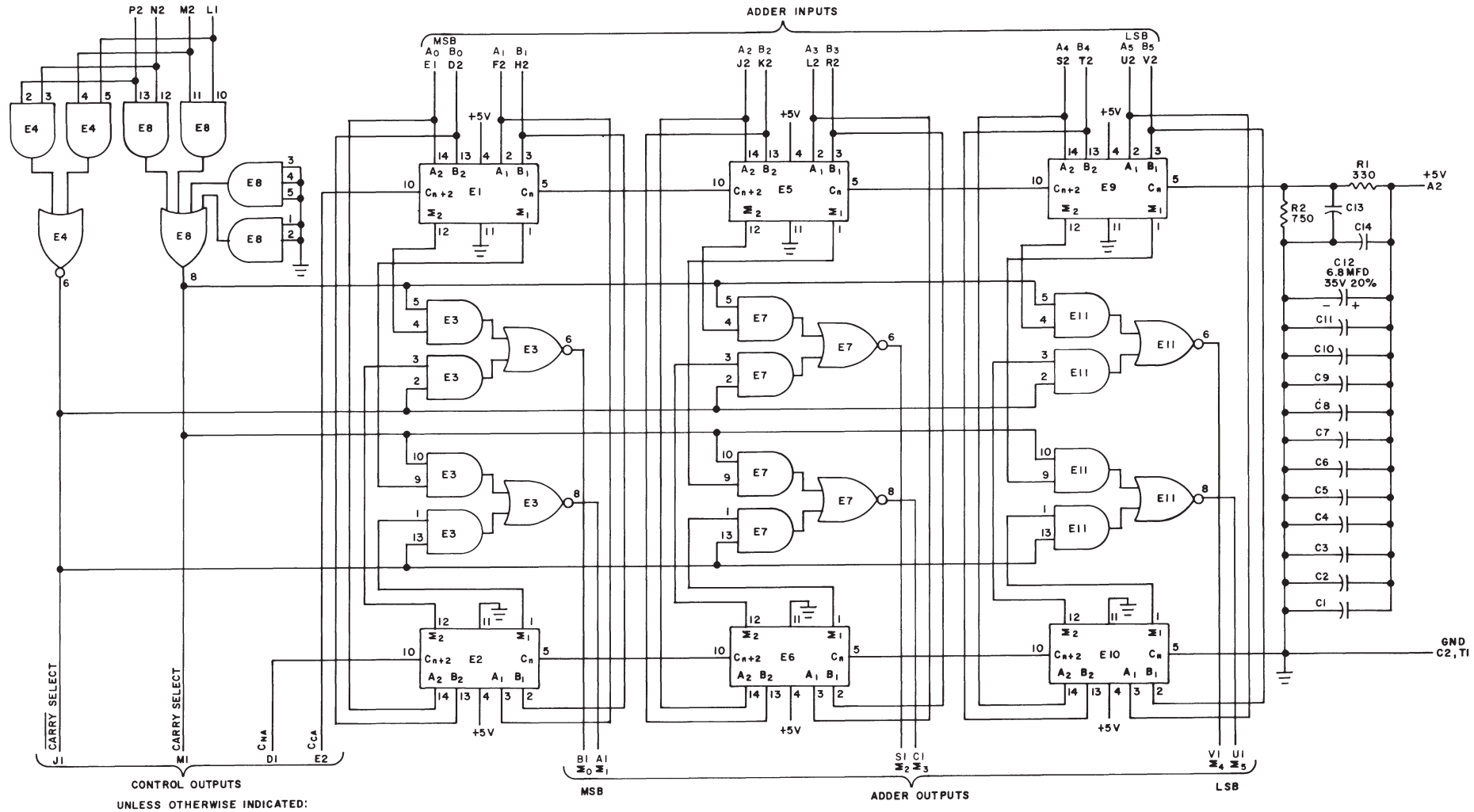

UNLESS OTHERWISE INDICATED:
CAPACITORS ARE .01MFD
RESISTORS ARE 1/4W; 5%
PIN 7 ON EACH IC (EXCEPT DEC7482N'S) = GND
PIN 14 ON EACH IC (EXCEPT DEC7482N'S) = +5V
E1, E2, E5, E6, E9, E10 ARE DEC7482N
E3, E4, E7, E11 ARE DEC74H50N
E8 IS DEC74H52N

OUTPUT DRIVE (UNIT LOADS)	
$\Sigma_0, \Sigma_1 \ldots \Sigma_5$	: 12.5
CARRY SELECT	: 5.0
C_{NC}, C_{CA}	: 5.0

INPUT LOADS (UNIT)	
A_1, A_3, A_5	: 8
B_1, B_3, B_5	: 8
A_0, A_2, A_4	: 2
B_0, B_2, B_4	: 2
OUTPUT SELECT	: 2.5

M164-3

REVISIONS		
CHK	CHG NO.	REV.
	00001	C

DRN. M. Weller	DATE 4-17-69	
CHK'D R. Yanagi	DATE 3-20-69	
ENG.	DATE 8/14/69	
PROD.	DATE 8/14/69	

TRANSISTOR & DIODE CONVERSION CHART			
DEC	EIA	DEC	EIA

digital EQUIPMENT CORPORATION MAYNARD, MASSACHUSETTS

TITLE 6 BIT ADDER M164

SIZE	CODE	NUMBER	REV.
C	CS	M164-0-1	C

PRINTED CIRCUIT REV. B

5 PINK DIST. 324, 434, 453

DEC FORM NO. DRC 102

SIZE	CODE	NUMBER	REV.
C	CS	M164-0-1	C