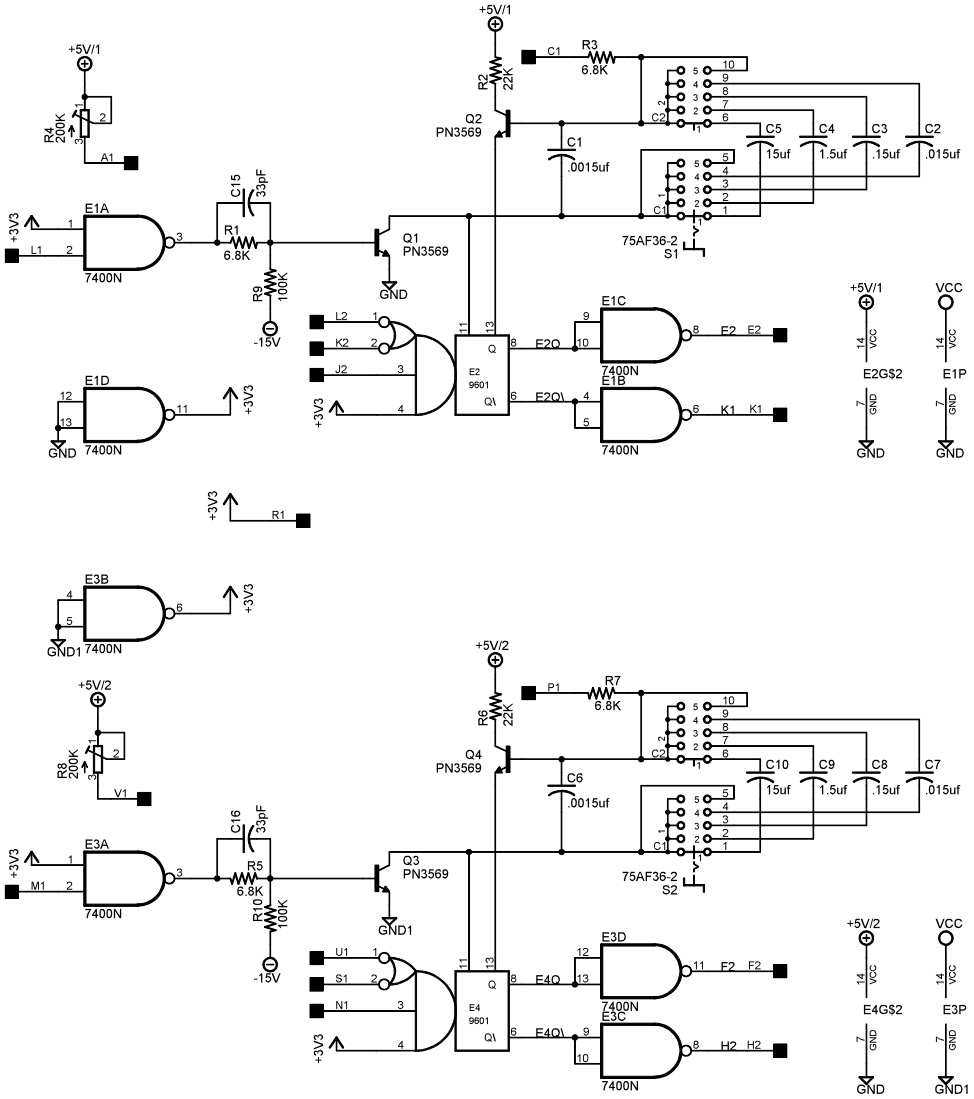

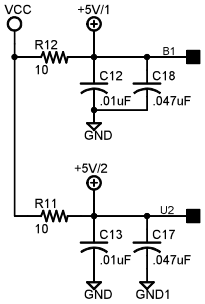

OUTLINE-SINGLE

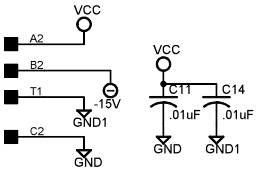

Range 5	5 usec to 50 usec
Range 4	50 usec to 500 usec
Range 3	500 usec to 5 msec
Range 2	5 msec to 50 msec
Range 1	50 msec to 500 msec

INTEGRATING ONE SHOT M307

TITLE: M307X

Document Number: B-CS-M307-0-1

REV: B

Date: 4/15/2013 08:26:30p

Sheet: 1/1