THIS SCHEMATIC IS FURNISHED ONLY FOR TEST AND MAINTENANCE PURPOSES. THE CIRCUITS ARE PROPRIETARY IN NATURE AND SHOULD BE TREATED ACCORDINGLY.
COPYRIGHT 1969 BY DIGITAL EQUIPMENT CORPORATION.

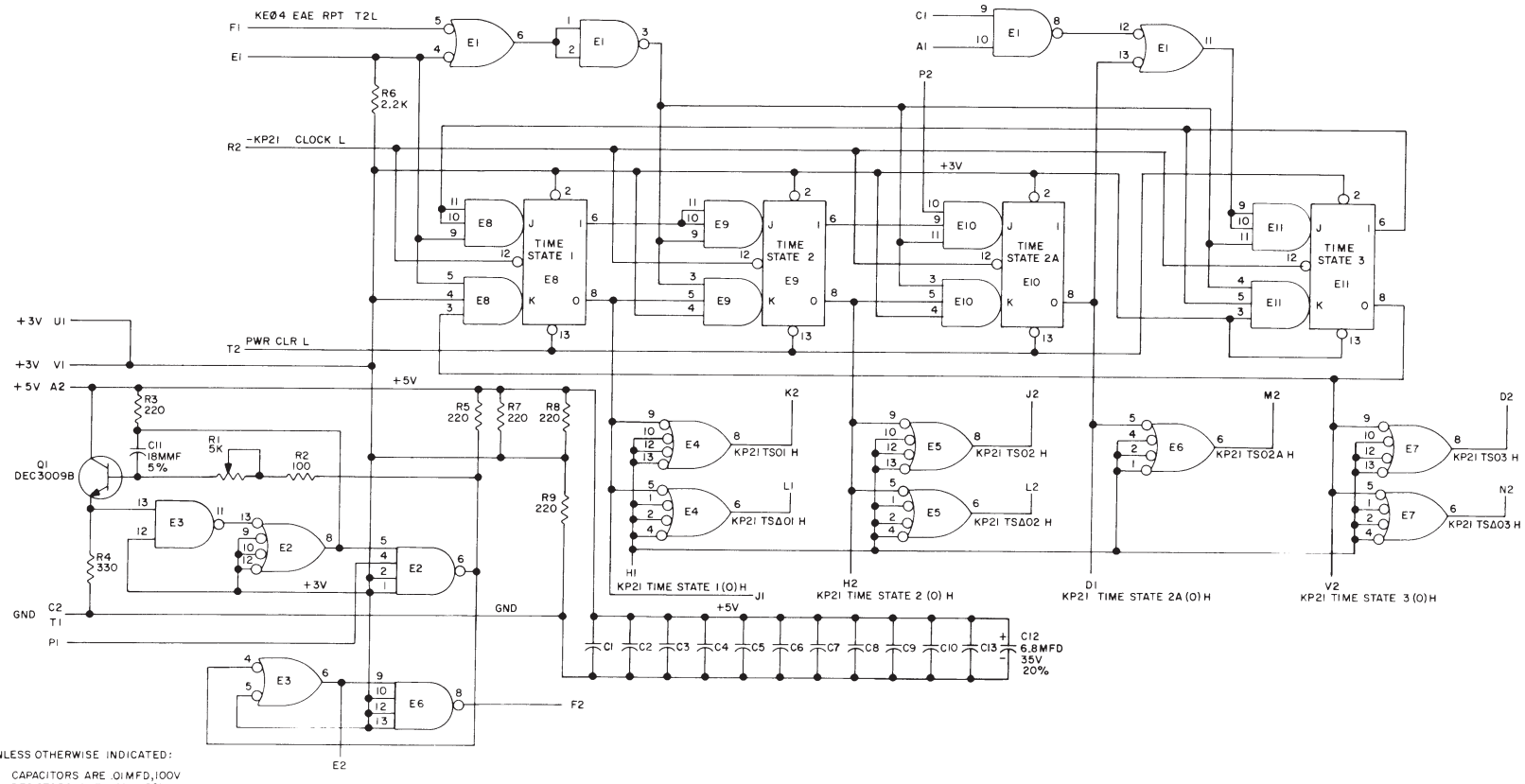

UNLESS OTHERWISE INDICATED:

CAPACITORS ARE .01MFD, 100V
RESISTORS ARE 1/4W, 5%
PIN 7 ON EACH IC = GND
PIN 14 ON EACH IC = +5V

E1 IS DEC7400N
E3 IS DEC74H00N
E2, E4, E5-E7 ARE DEC74H40N
E8, E9, E10, E11, ARE DEC74H72N

TRANSISTOR & DIODE CONVERSION CHART			
DEC	EIA	DEC	EIA
DEC3009B	2N3009		

DRN BUTLER DATE 8/26/69
CHK'D DATE 8/26/69
ENG DATE
PROD DATE

digital EQUIPMENT CORPORATION MAYNARD MASSACHUSETTS

TITLE TIME STATE GENERATOR M775

SIZE	CODE	NUMBER	REV
C	CS	M775-0-1	

PRINTED CIRCUIT REV