THIS SCHEMATIC IS FURNISHED ONLY FOR TEST AND MAINTENANCE PURPOSES. THE CIRCUITS ARE PROPRIETARY IN NATURE AND SHOULD BE TREATED ACCORDINGLY
COPYRIGHT 1970 BY DIGITAL EQUIPMENT CORPORATION

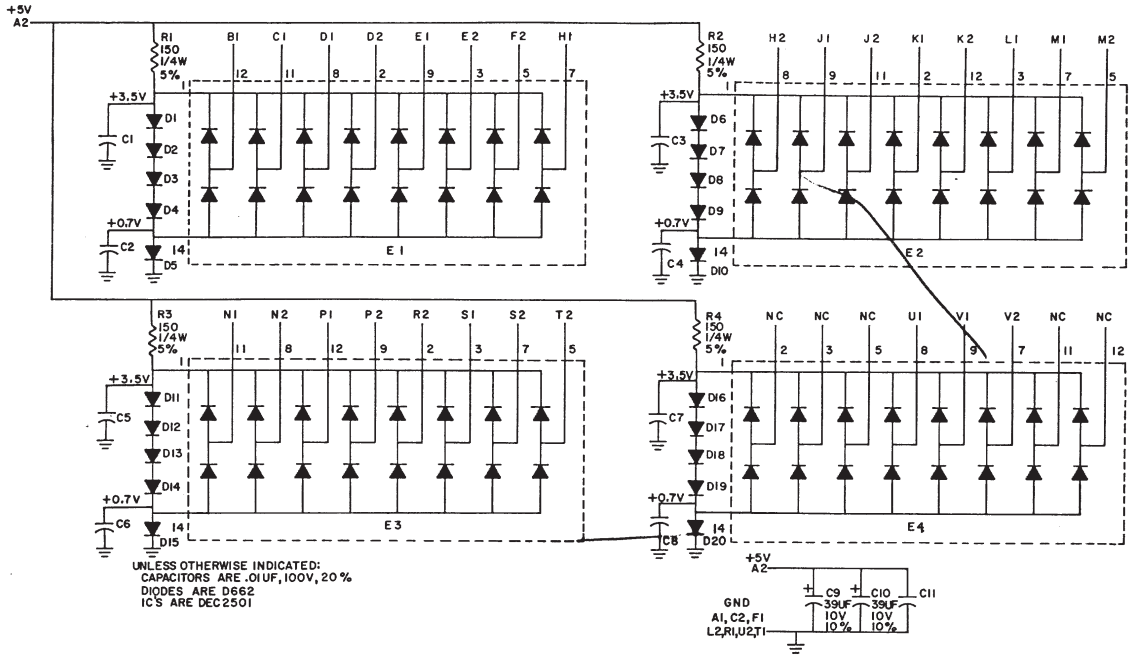

UNLESS OTHERWISE INDICATED:
CAPACITORS ARE .01UF, 100V, 20%
DIODES ARE D662
IC'S ARE DEC2501

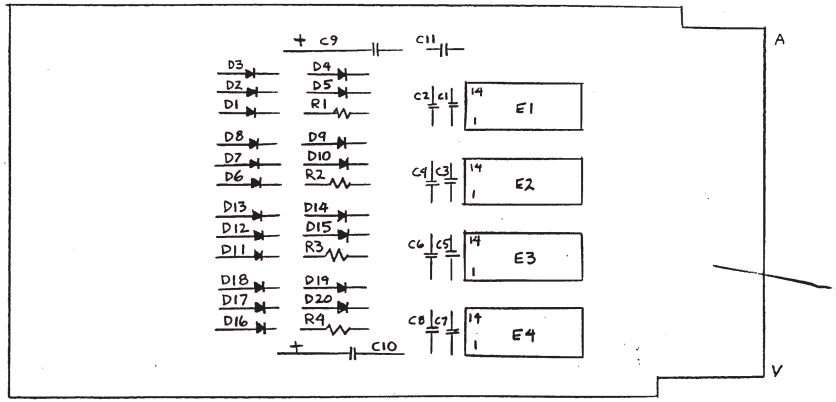

ITEM NO.	DEC PART NO.	DESCRIPTION	QTY.
11	9008337-06	HANDLE, FLIP CHIP - MAGENTA	1
10	9006732	EYELET #GS 4-7	2
9	1910010	I.C. DEC 2501	4
8	1300250	RES. 150, ¼W, 5%	4
7	1100113	DIODE D662	20
6	1001610	CAP. .01UF, 100V, 20% DISC	9
5	1000076	CAP. 39UF, 10V, 10% S. TANT	2
4	5009291	ETCHED CIRCUIT BOARD	1
3	B-MH-M952-0-6	MODULE ECO HISTORY	
2	C-AH-M952-0-5	ASSY/DRILLING HOLE LAYOUT	
1	K-CO-M952-0-4	X-Y COORDINATE HOLE LOCATION	

PARTS LIST

REVISIONS		
CHK	CHG NO	REV
7-71	00001	B

DRN J. Cooper 11/13/70
CHK'D 12-28-70
ENG 12-28-70
PROC

TRANSISTOR & DIODE CONVERSION CHART

DEC	EIA	DEC	EIA
D662	1N645		

digital EQUIPMENT CORPORATION MAYNARD, MASSACHUSETTS

TITLE LEVEL TERMINATOR M952

SIZE	CODE	NUMBER	REV.
C	CS	M952-0-1	B

PRINTED CIRCUIT REV. C

REV.	B
NUMBER	M952-0-1
CODE	CS
SIZE	C

DEC FORM NO
DRC 102

1-15-9 B5