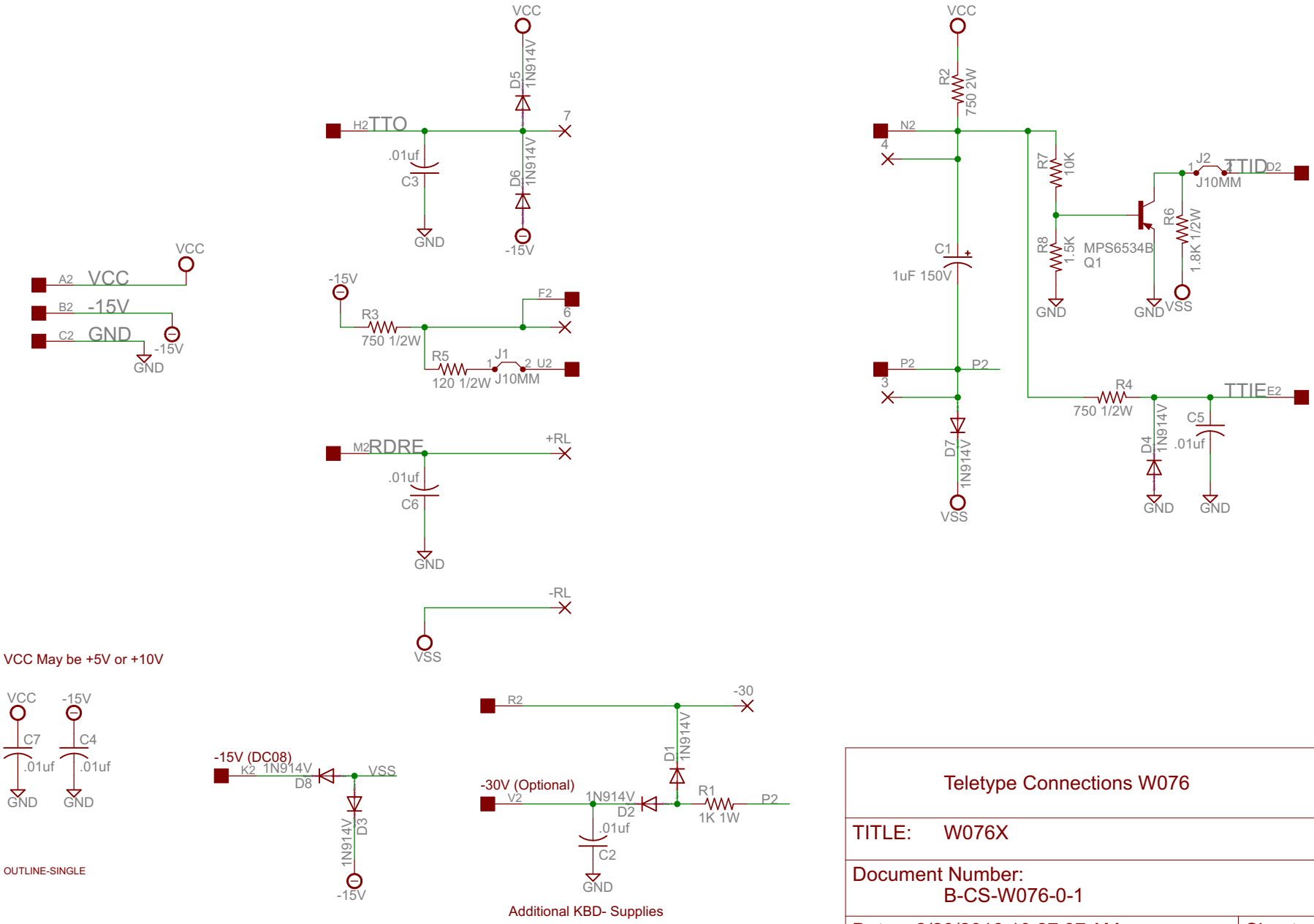

Teletype Connections W076

TITLE: W076X

Document Number: B-CS-W076-0-1

REV: D

Date: 2/20/2016 10:27:37 AM

Sheet: 1/1