DECUS
PROGRAM LIBRARY

DECUS NO.	8-645
TITLE	INTERFACING THE PDP-8 TO THE PRINTEC-100 LINE PRINTER
AUTHOR	H. E. Cronin
COMPANY	Naval Weapons Center China Lake, California
DATE	June 1973
SOURCE LANGUAGE	PAL

ATTENTION

This is a USER program. Other than requiring that it conform to submittal and review standards, no quality control has been imposed upon this program by DECUS.

The DECUS Program Library is a clearing house only; it does not generate or test programs. No warranty, express or implied, is made by the contributor, Digital Equipment Computer Users Society or Digital Equipment Corporation as to the accuracy or functioning of the program or related material, and no responsibility is assumed by these parties in connection therewith.

DECUS LIBRARY
PROGRAM REVIEW SHEET

The program you have requested is a new submission to the DECUS Library. In order to correct any deficiencies in submitted material, and to assess whether a program should remain in the library, programs are distributed in temporary form to early requesters. Completion and return of this review sheet will be of great value in assessing this program.

Please complete all sections of this form relevant to the material you have received.

Title of Program Reviewed _____ DECUS No. _____

(1) Does this program duplicate other program(s) in the DECUS Library? Yes ☐ No ☐ DECUS No.(s) _____

Is it an improvement? Yes ☐ No ☐ (Please explain) _____

_____

(2) Does the catalog abstract adequately describe the program? Yes ☐ No ☐ (Please suggest changes) _____

_____

(3) Is the write-up adequate? Yes ☐ No ☐

(4) Are the operating instructions:

(a) Clear Yes ☐ No ☐ (b) Understandable Yes ☐ No ☐ (c) Complete Yes ☐ No ☐

(5) Operation

Please check any section which caused trouble and specify below.

Paper Tape Compile ☐ Load ☐ Start-up ☐

DECtape/LINCtape/Magtape Monitor or system file retrieval ☐ Compile ☐ Load ☐ Start-up ☐

Program Operation Running ☐ Peripheral handling ☐ Input/output ☐

Comments, Problems, etc. _____

_____

(6) Are there any restrictions or problems not mentioned by the author? Yes ☐ No ☐ (Please specify) _____

_____

(7) Are you able to suggest corrections or improvements to this program? Yes ☐ No ☐ (Please complete Program Revision Submission Form)

(8) Should this program:

(a) Remain in the library in this form ☐ (b) Remain in the library after amendment ☐ (c) Be removed ☐

(9) General comments and suggestions _____

_____

_____

_____

_____

_____

Will you allow your name to be associated with this review if it is published? Yes ☐ No ☐ (Strict confidence will be observed)

Name _____

Address _____ Country _____

Date _____ Signed _____

Review sheet for DECUS Program _____ DECUS No. _____

September 1972

DECUS Program Library Write-up

DECUS NO. 8-645

INTERFACING THE PDP-8 COMPUTER TO THE PRINTEC-100 LINE PRINTER

by

H. E. Cronin
Naval Weapons Center
China Lake, California

ABSTRACT

The circuit and design considerations for interfacing the PDP-8 computer and a Printec-100 line printer are discussed. Three patches are shown which convert the TTY instructions in "FOCAL" and "EDU-10 BASIC" and "FORTRAN" to output to the line printer. An assembly language program to printout all the alphabetic and numeric characters for testing purposes is shown. An overlay is also shown for FOCAL which uses a "P" command to cause either the teletype or the line printer to be used for output, according to the setting of a switch on the switch register.

INTRODUCTION

The big difference between line printers and teletypes is in the speed at which characters must be fed into the input buffers. A teletype sits happily waiting for the next character to be input, and the printhead is ratcheted so that it holds the "place" in the text. But the line printer must have a full buffer of characters to print, or it must receive new characters at a certain minimum rate, otherwise it will automatically perform a carriage return and line feed. Being able to use the teletype like instructions is a great advantage however, since assembly language programming can use the same or slightly modified subroutines for output, with only slight changes in the device coding.

The Printec-100 line printer* prints 100 characters per second at up to 136 character columns, uses ASCII code and has a vertical format control unit. The vertical formatter uses an endless paper tape with holes punched to control the line spacing and automatically feed paper from "bottom of page" to "top of page". The print wheel has 3 sets of print characters rotating in front of the paper as it moves along the line of print. Timing circuits in the printer allow proper selection and printing of characters to get the proper sequence. After the printing of a line starts, three characters must be received during each 25 millisecond period, otherwise the line is ended automatically by a carriage return, line feed.

HARDWARE

Interface Circuit

The circuit for interfacing from the PDP-8 to the Printec-100 is shown in Figure 1. Input is from the negative logic PDP-8, and the output is to the positive logic PRINTEC-100. The device code used is "66", which is the same as that used by other DEC line printers, and may be useful in utilization of DEC or DECUS programs. The three top transistor-NAND circuits are for control; the lower seven circuits are for the data bits.

Two commands are implemented--the "SKIP ON READY STATUS" and "LINE PRINTER STROBE". Data is transferred while device code "66" is TRUE, and is inverted for proper presentation to the Printec. Thus, in operation, a "SKIP ON READY" command--6661 is followed by a JMP.-1, and will go into a waiting loop until LINE PRINTER/DATA REQUEST is TRUE. This is followed by the "PRINT" command--6664. It is assumed that the character to be printed is in the AC, or that a TAD instruction has been added to get the character into the AC. A "CLEAR AC" instruction might be written into the print subroutine also, following the "PRINT" instruction. The Printec-100 recognizes the 8 bit ASCII code from the 7 bits given by the interface. Actually one can print all alphabetics and numerics from a 6 bit code, but then carriage

* Printer Technology, Inc.
Sixth Road
Woburn Industrial Park
Woburn, Mass. 01801

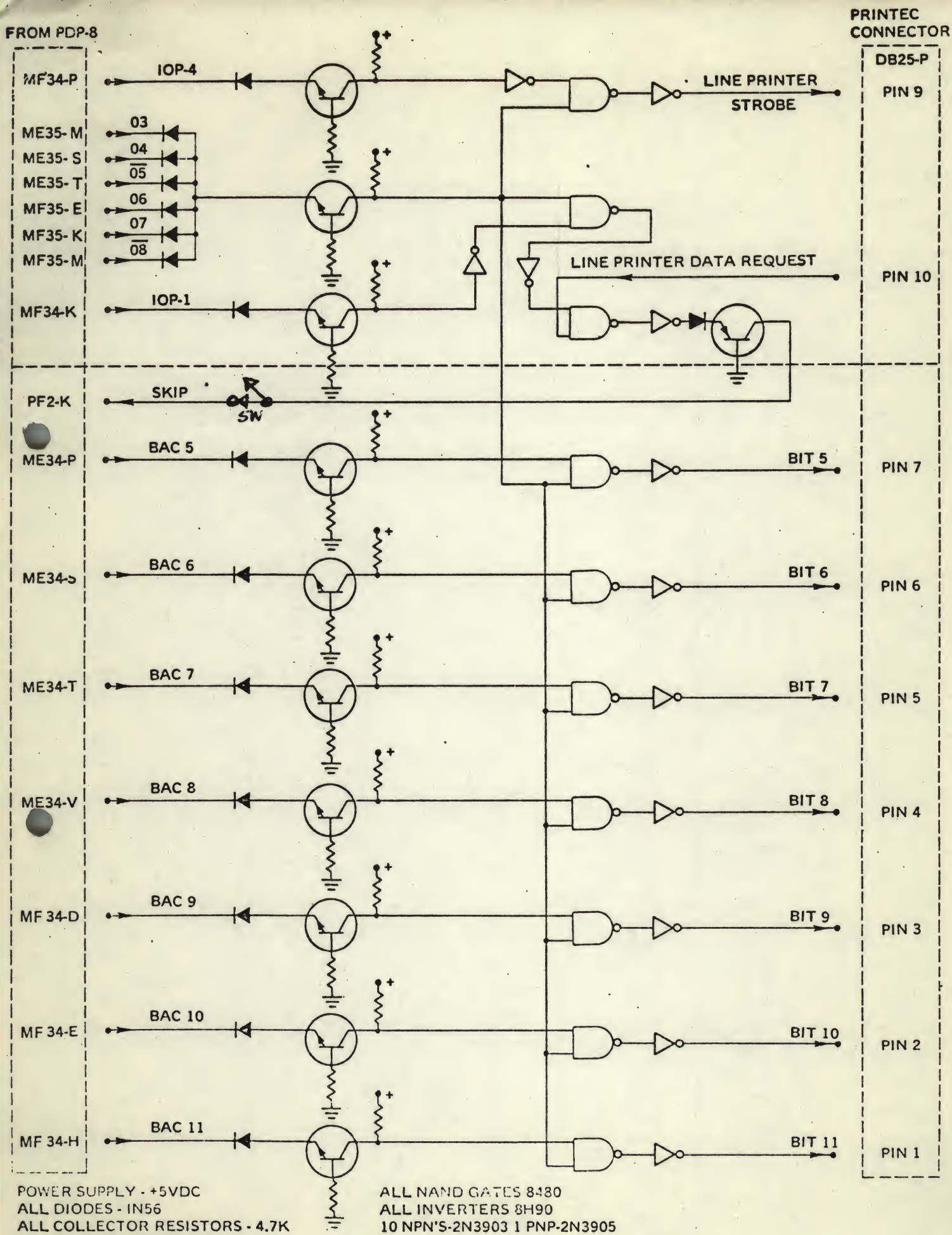

POWER SUPPLY - +5VDC
ALL DIODES - IN56
ALL COLLECTOR RESISTORS - 4.7K
ALL BASE RESISTORS - 1K

ALL NAND GATES 8480
ALL INVERTERS 8H90
10 NPN'S-2N3903 1 PNP-2N3905

FIGURE 1. PDP-8 PRINTEC-100 INTERFACE.

return, linefeed, and form feed are not available, as they are with the 7 bit code. For large data outputs, the extra circuitry adds a lot of convenience.

The interface does not have provisions for a character flag, or interrupt flag, or for clearing these. It will not operate in the "interrupt" system, but due to the fact that it must print a line at a time this is not an inconvenience. The fact that "FOCAL" is rather slow speed may also help. The point is that perhaps very high speed printers might not work well under this system, due to synchronizing problems, or that systems having many devices that use the "interrupt" system will not have the proper priority levels maintained.

SOFTWARE

Programming

The design of the interface is specifically done with an imitation of teletype print subroutines in mind. It is very convenient then to substitute line printer commands for teletype commands, and programs that are "output bound" by the slow speed of the teletype can be speeded up at least ten times or more by use of the Printec 100. A typical subroutine for teletype and for the line printer can be compared. It is assumed a JMS to the subroutine is used, and that the character to be printed is in the accumulator.

TTY

```
PRINT,    Ø   / store return
              address
          TSF  / Skip on TTY
              Ready
       JMP.-1  / Not ready, go back
          TPC  / Print character
          CLA  / Clear AC
          JMP  I PRINT
```

LP

```
PRINT,    Ø   / store return
              address
          LSF  / 6661, skip on
              printer ready
       JMP.-1  / Not ready, go back
          LPC  / Print character
          CLA  / Clear AC
          JMP  I PRINT
```

Other programs can be written also which print out a string of characters stored in a buffer, which may be more efficient in some applications.

In order to test the operation of the line printer, the following program can be put in via the switch register, or from a binary tape, and will print out the alphabetic and numeric characters:

"PROGRAM TO CHECK LINE PRINTER OPERATION"

Location	Instruction	
0030	7300	/ CLA CLL
0031	1041	/ TAD LOC 41
0032	6661	/ CHK LP READY STATUS
0033	5032	/ WAIT TIL READY
0034	6664	/ PRINT IT
0035	2041	/ ISZ LOC 41
0036	2042	/ ISZ LOC 42
0037	5030	/ JMP BACK TO START
0040	7402	/ HALT
0041	0200	/ BEGINNING OF ASCII
0042	5000	/ A COUNTER

A printout of about a page of characters is done by this program, and the instructions in Locations 41 and 42 should be reloaded if the program is to be repeated.

Patches

The real joy of having a line printer lies in being able to output with a language, "FOCAL" (Ref. 1), "BASIC" (Ref. 2), or "FORTRAN" (Ref. 3). This is especially true of "FOCAL" which is the most delightful, versatile, efficient language of any. The simplicity of its use, however, is due to good design and complexity in the coding of the language, and the result is that data output is done through the "interrupt" processor. Since the interface has no "interrupt" flag or system, a straight substitution of teletype coding does not work in "FOCAL". From experimentation, however, it was found that the following patch works:

"LINE PRINTER PATCH TO "FOCAL""

Location	From	To	
2703	5301	7000	/ NOP
2711	6046	6661	/ CHECK READY STATUS
2712	3016	5311	/ JMP.-1
2713	5323	6664	/ PRINT

This patch will cause all output to be on the line printer, and can be loaded in via the switch register.

Data can be input from the teletype keyboard, although it will not echo on the TTY.

When the line printer buffer receives three characters at a slow rate, it will print these three characters and do an automatic carriage return--line feed. Therefore, as a program tape is read in via the teletype tape reader, lines of three characters are printed. This wastes paper and may be avoided with an overlay which uses a "P" command to select either the line printer or teletype for output. The overlay is discussed below.

It is fairly easy to find the locations of the teletype printout routines by starting a program printout and then hitting the "stop" button. By single stepping through the rest of the printout, one can find the locations of the TSF (6041) and TPC (6044) or TLS (6046) instructions. It happens that "EDU 10 BASIC" and "FORTRAN OPERATING SYSTEM" have straight forward output subroutines. The patches to these are shown below:

"LINE PRINTER PATCH TO BASIC AND FORTRAN"

"EDU 10 BASIC"			"FORTRAN"		
Location	From	To	Location	From	To
0771	6041	6661	3265	6041	6661
0774	6046	6664	3267	6046	6664
1000	6046	6664			

When inputting a program tape via the TTY tape reader in "BASIC" the Printec-100 characteristic of printing 3 characters, LF-CR can be negated by turning off the line printer. The program entered can be checked visually by use of the "LIST" command.

In "FOCAL" any error diagnostics are printed on the teletype as it uses a different print routine for this. The "control-C" will also work properly and return command mode to the operator.

There is one command in "FOCAL" which does not work as expected, however. Ordinarily, one uses a "TYPE #" in order to get a carriage return without line feed. If one uses this command, he gets a "form feed", that is, the paper will eject to the next page on the line printer. The "control L" command does this also. This could be useful when put into a "FOCAL" program for data output or printing tables to cause a blank page or fresh page to be inserted between sections.

Output Selector Overlay

An overlay to "FOCAL" to select either teletype or line printer for output was mentioned above. It can be used to quickly change from one to the other. If one wishes to make a change, he sets the switch register to some number for teletype, or to zero for line printer. He then types "P" and the program reads the switch register and sets the wanted instructions in the proper locations. Any error message may be ignored, and command return is indicated by the asterisk (*).

The "L" command, and its operating locations are used for this overlay, which can be assembled using PAL III (Ref. 4), or with some DECUS programs (Ref. 5 and 6).

"OVERLAY TO FOCAL FOR SWITCH TO LINE PRINTER OR TTY"

```
                        *1004
1004      0320                          / Changes "L" to "P"
                        *7503
7503      7000          NOP             / Could be 0000 for JMS
7504      7300          CLA CLL         / Clear AC
7505      7404          OSR             / Test for TTY or LP?
7506      7650          SNA CLA         / Non Zero AC, Skip to TTY
7507      5321          JMP 7521        / Number in AC, Go to LP
7510      1334          TAD 7534        / Get 5301
7511      3744          DCA I Z 7544    / Put it in 2703-INDIR
7512      1335          TAD 7535        / Get 6046
7513      3745          DCA I Z 7545    / Put it in 2711-INDIR
7514      1336          TAD 7536        / Get 3016
7515      3746          DCA I Z 7546    / Put it in 2712-INDIR
7516      1337          TAD 7537        / Get 5323
7517      3747          DCA I Z 7547    / Put it in 2713-INDIR
7520      5177          JMP Z 0177      / JMP Back to Holding Pattern
7521      6661          6661            / Tricky Test for LP O.K.
7522      5310          JMP 7510        / HA! You ain't got one
7523      1340          TAD 7540        / Get 7000
7524      3744          DCA I Z 7544    / Put it in 2703-INDIR
7525      1341          TAD 7541        / Get 6661
7526      3745          DCA I Z 7545    / Put it in 2711-INDIR
7527      1342          TAD 7542        / Get 5311
7530      3746          DCA I Z 7546    / Put it in 2712-INDIR
7531      1343          TAD 7543        / Get 6664
7532      3747          DCA I Z 7547    / Put it in 2713-INDIR
7533      5177          JMP Z 0177      / JMP Back to Holding Pattern
7534      5301          JMP 7501        / These
7535      6046          6046            / are
7536      3016          DCA Z 0016      / the
7537      5323          JMP 7523        / instructions
7540      7000          NOP             / that
7541      6661          6661            / get
7542      5311          JMP 7511
7543      6664          6664            / transferred
7544      2703                          / This has
7545      2711                          / locations to
7546      2712                          / which instructions
7547      2713                          / are transferred
7550      7402                          / Stopper, you should never get here
7551      5005                          / Checksum
```

The program tests to see if the line printer is on-line by use of the "SKIP" instruction at Location 7521. If it is not ready, there is a return to the teletype instructions. This keeps the system from hanging up, with no output from either line printer or teletype.

By the use of this sytem, the teletype can be used for initial dialogue, program loading, debugging and testing. When printout of data runs on the line printer is desired, typing the "P" command, setting the switch register to zero, and typing CR will get it. To return to TTY, setting a switch in the switch register, typing "P", and a CR will get it back.

REFERENCES

1. FOCAL, 1969 + INIT

   DEC-08-AJAE-PB 7/9/69

   Also applies to FOCAL-8 and INIT (PDP-8E) 10/71, when used with overlay FOCAL-8 family of 8 overlay, 10/71, DEC-08-LFOCA-A-PB on the PDP-8 computer.

2. EDU-10 Self starting Binary Tape, DEC-E8-U10A-PB, 6/24/71.

3. FORTRAN Operating System, DEC-08-AFC3-PB 8/67.

4. PAL-III, DEC-08-ASCI-PB, 4/13/70.

5. RIM/BIN DATA PROGRAM TAPE Generator DECUS/NO. 8-81, June 12, 1967.

6. BIN tape disassembly program for PDP-5/8, DECUS No. 5/8 - 18A, Sept. 14, 1966.