THIS SCHEMATIC IS FURNISHED ONLY FOR TEST AND MAINTENANCE PURPOSES. THE CIRCUITS ARE PROPRIETARY IN NATURE AND SHOULD BE TREATED ACCORDINGLY.
COPYRIGHT 1967 BY DIGITAL EQUIPMENT CORPORATION

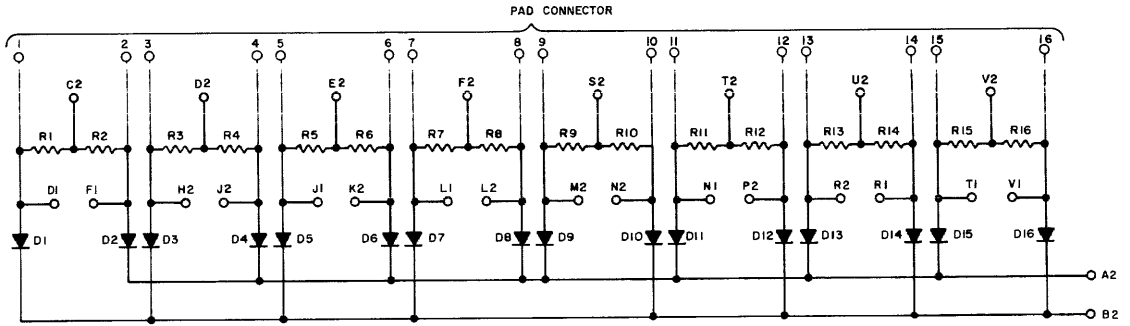


| REFERENCE DESIGNATION | DESCRIPTION | PART NO. |
|---|---|---|
| D1 THRU D16 | DIODE D672 | 1105275 |
| R1 THRU R16 | RES, 750 1/8W 1% 100 MFP | 1302955 |
| | PARTS LIST | C-UA-G681-0-0 |

PARTS LIST

| TRANSISTOR & DIODE CONVERSION CHART | | | |
|---|---|---|---|
| DEC | EIA | DEC | EIA |
| D670 | IN3653 | | |

| REVISIONS | | | |
|---|---|---|---|
| CHK | CHG NO. | REV | |
| | 00002 | A | |
| | 00003 | B | |
| | 00004 | D | |

| | | |
|---|---|---|
| DRN | M Haller | DATE 12-27-67 |
| CHK'D | | DATE |
| ENG | | DATE |
| PROD | | DATE |

digital EQUIPMENT CORPORATION
MAYNARD, MASSACHUSETTS

TITLE 8 TRACK MATRIX G681

| SIZE | CODE | NUMBER | REV |
|---|---|---|---|
| B | CS | G681-0-1 | D |

PRINTED CIRCUIT REV. D