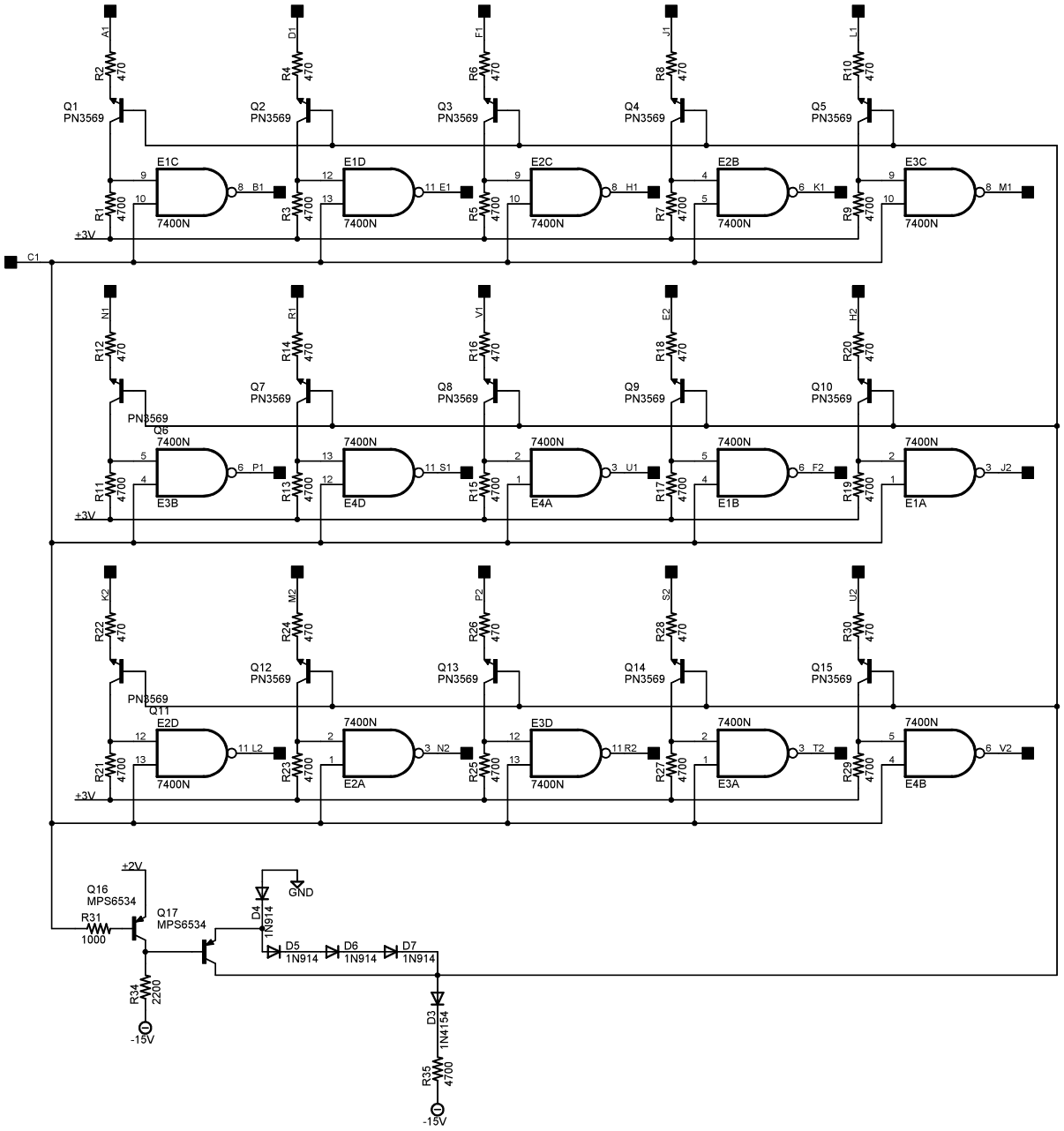

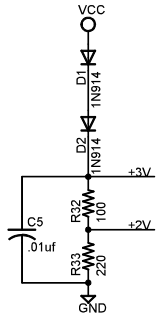

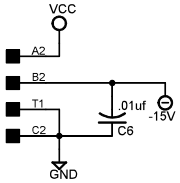

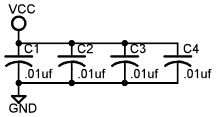

OUTLINE-SINGLE

BUS DRIVER INTERFACE M100

TITLE: M100X

Document Number: B-CS-M100-0-1

REV: B

Date: 2/25/2013 03:20:53p

Sheet: 1/1