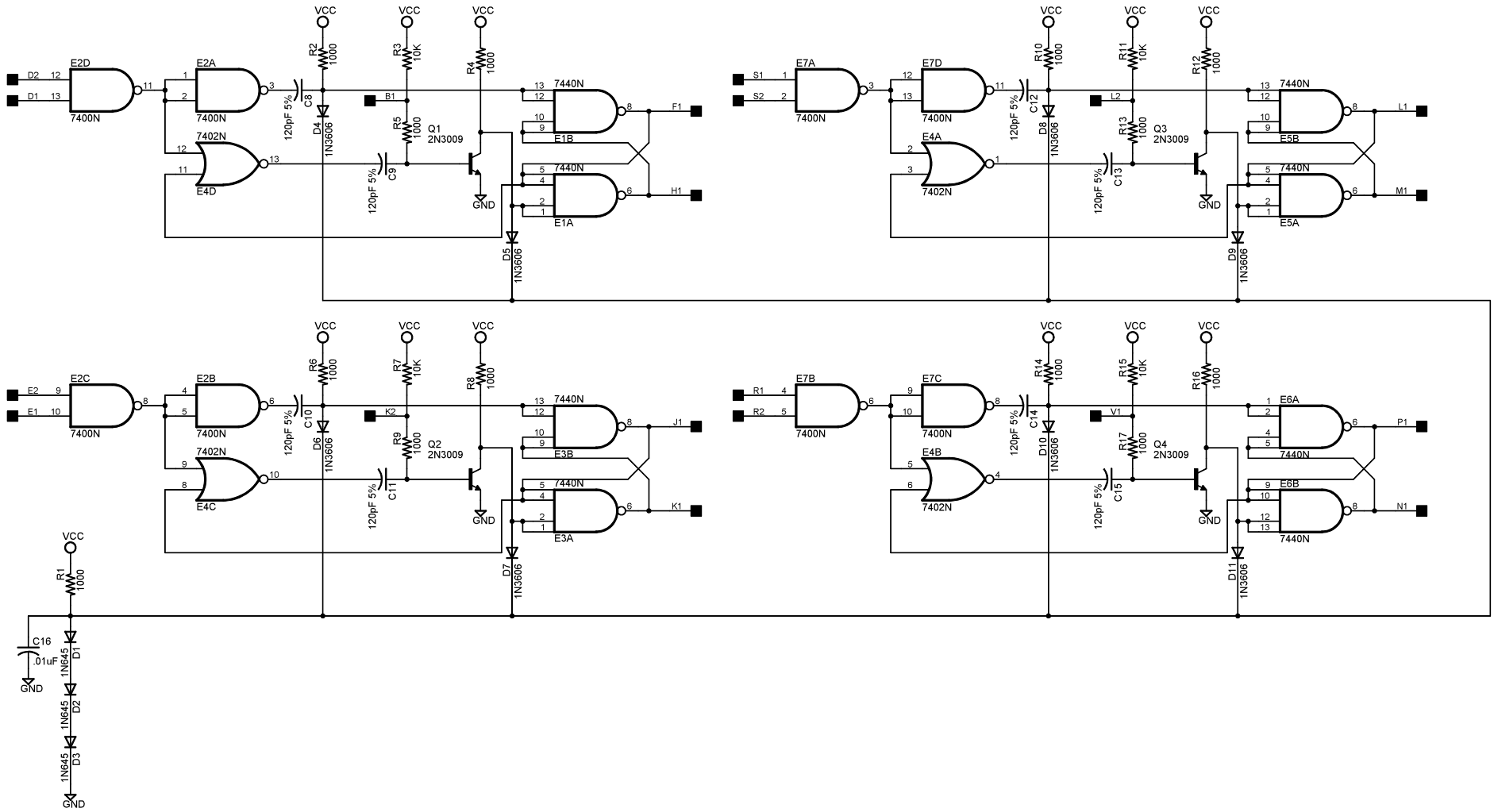

One Shot Delay M304

TITLE: M304A

Document Number: B-CS-M304-0-1

REV:

Date: 4/10/2013 08:32:17p

Sheet: 1/1