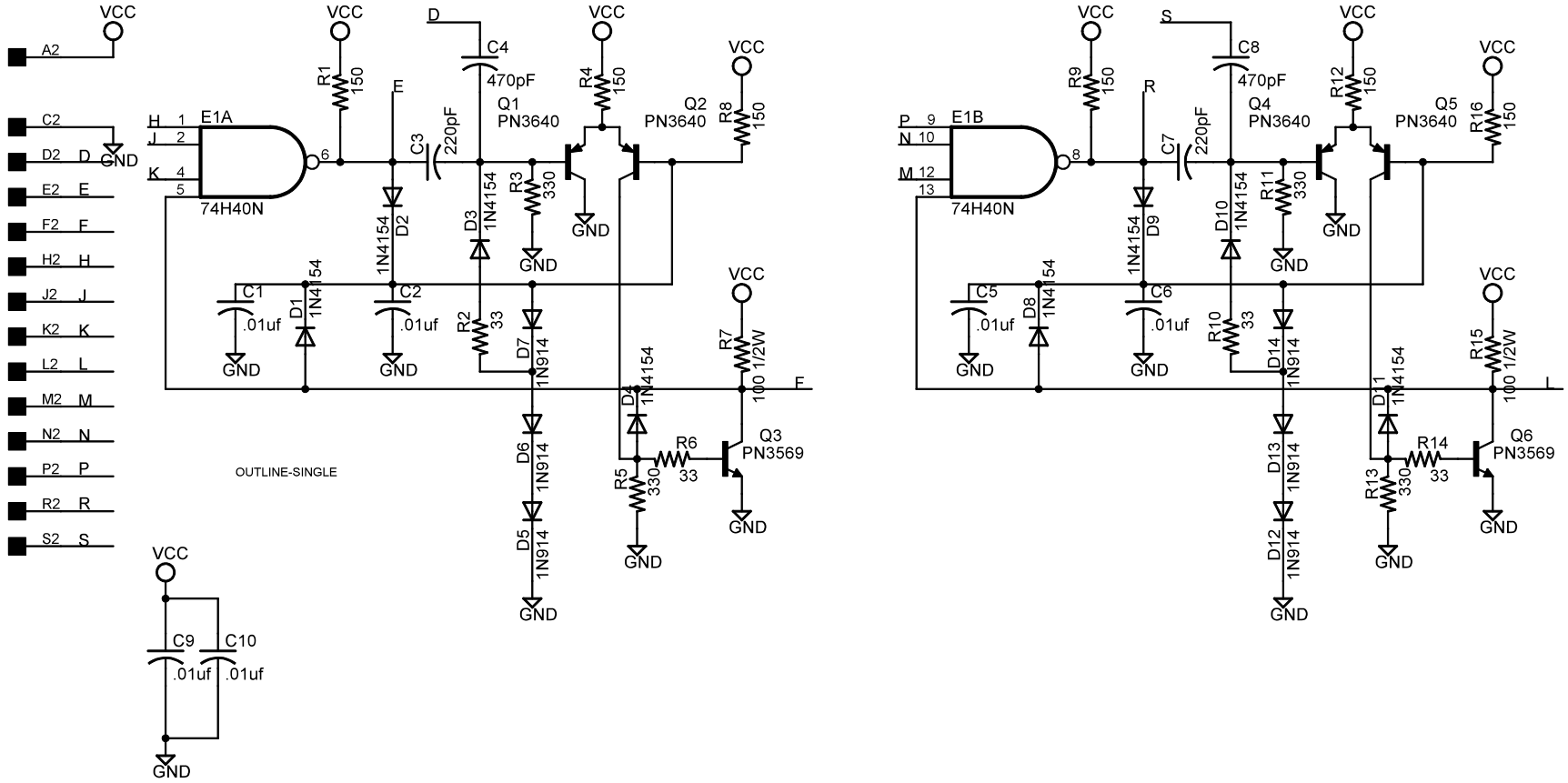

Pulse Generator M602	
TITLE: M602X	
Document Number: B-CS-M602-0-1	REV: B
Date: 5/22/2013 01:26:52a	Sheet: 1/1