RS-B-R603-3

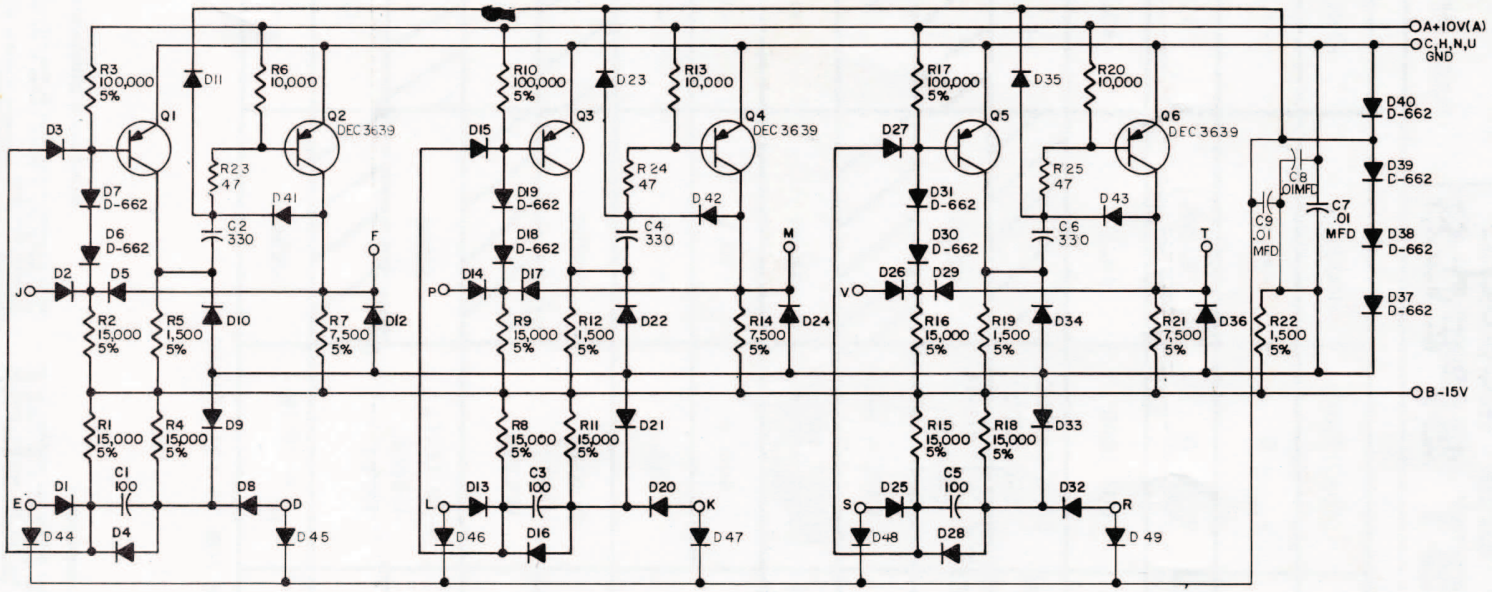

UNLESS OTHERWISE INDICATED:
RESISTORS ARE 1/4W; 10%
CAPACITORS ARE MMFD
DIODES ARE D-664
TRANSISTORS ARE DEC 3639-0

TRANSISTOR & DIODE CONVERSION CHART			
DEC	EIA	DEC	EIA
DEC 3639-0	2N 3639		
D-662	1N645		
D-664	1N3606		
DEC 3639	2N 3639		

NOTES

THIS SCHEMATIC IS FURNISHED ONLY FOR TEST AND MAINTENANCE PURPOSES. THE CIRCUITS ARE PROPRIETARY IN NATURE AND SHOULD BE TREATED ACCORDINGLY.

COPYRIGHT 1964 BY DIGITAL EQUIPMENT CORPORATION

D	RS-B-R603	3
PULSE AMPLIFIER R603		