THIS SCHEMATIC IS FURNISHED ONLY FOR TEST AND MAINTENANCE PURPOSES. THE CIRCUITS ARE PROPRIETARY IN NATURE AND SHOULD BE TREATED ACCORDINGLY.
COPYRIGHT 1964 BY DIGITAL EQUIPMENT CORPORATION

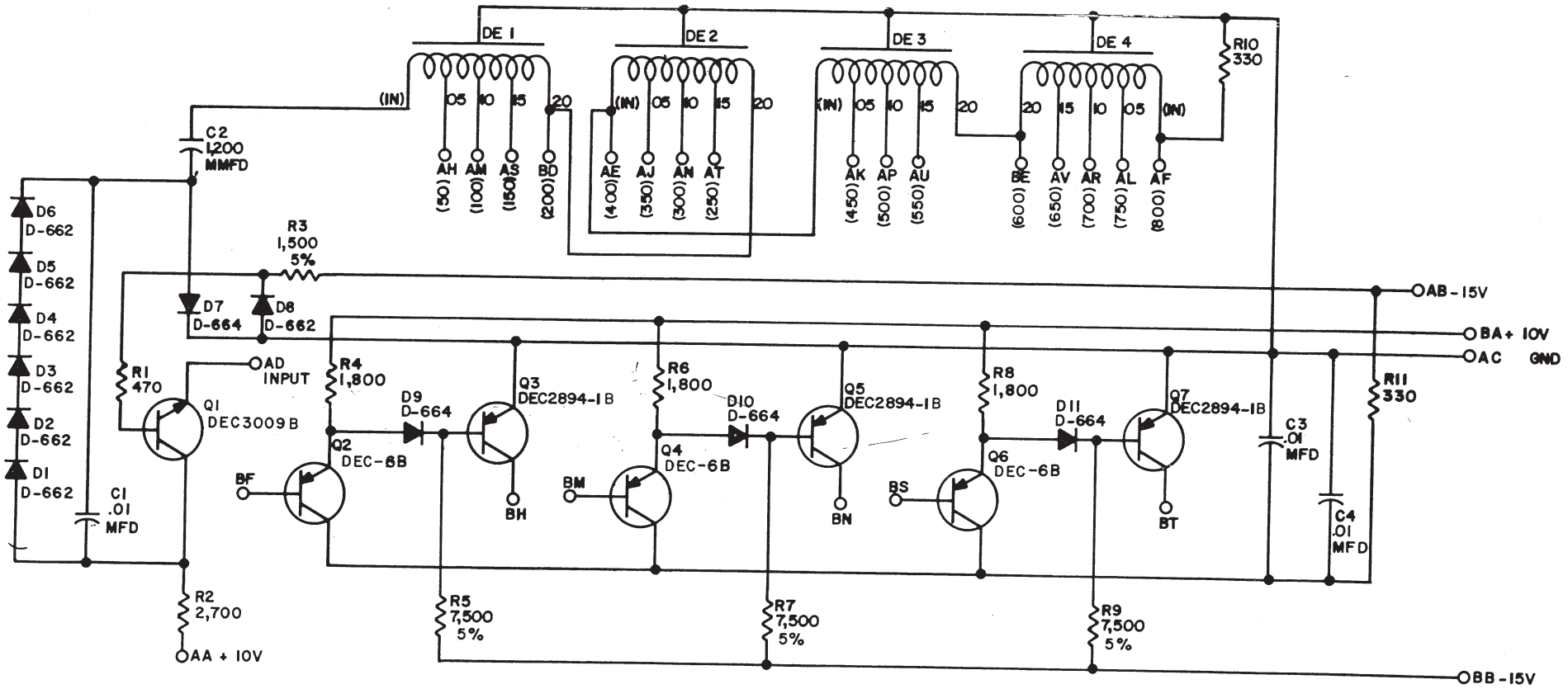

UNLESS OTHERWISE INDICATED:
RESISTORS ARE 1/4W; 10%
DE1 - DE4 ARE DEC NO. 330-25E-6

PARTS LIST A-PL-W300-0-0

REVISIONS		
CHK	CHG NO.	REV.
REV.	REDR.	C,D
	5440	E
	5653	
	7108	F

DRN. H. PORTER	DATE 12-3-64
CHK'D N. PERRYMAN	DATE 12-4-64
ENG. D. O'CONNOR	DATE 12-4-64
PROD. 2	DATE

TRANSISTOR & DIODE CONVERSION CHART

DEC	EIA	DEC	EIA
DEC-6B	NONE		
DEC2894-1B	NONE		
DEC3009B	2N3009		
D662	IN645		
D664	IN3606		

digital EQUIPMENT CORPORATION
MAYNARD, MASSACHUSETTS

TITLE DELAY LINE W30C

SIZE	CODE	NUMBER	REV.
B	CS	W300-0-1	F

PRINTED CIRCUIT REV. C

DEC FORM NO. DRB 102

PINK

DIST. 324 434 435 2

SIZE B CODE CS NUMBER W300-0-1 REV. F