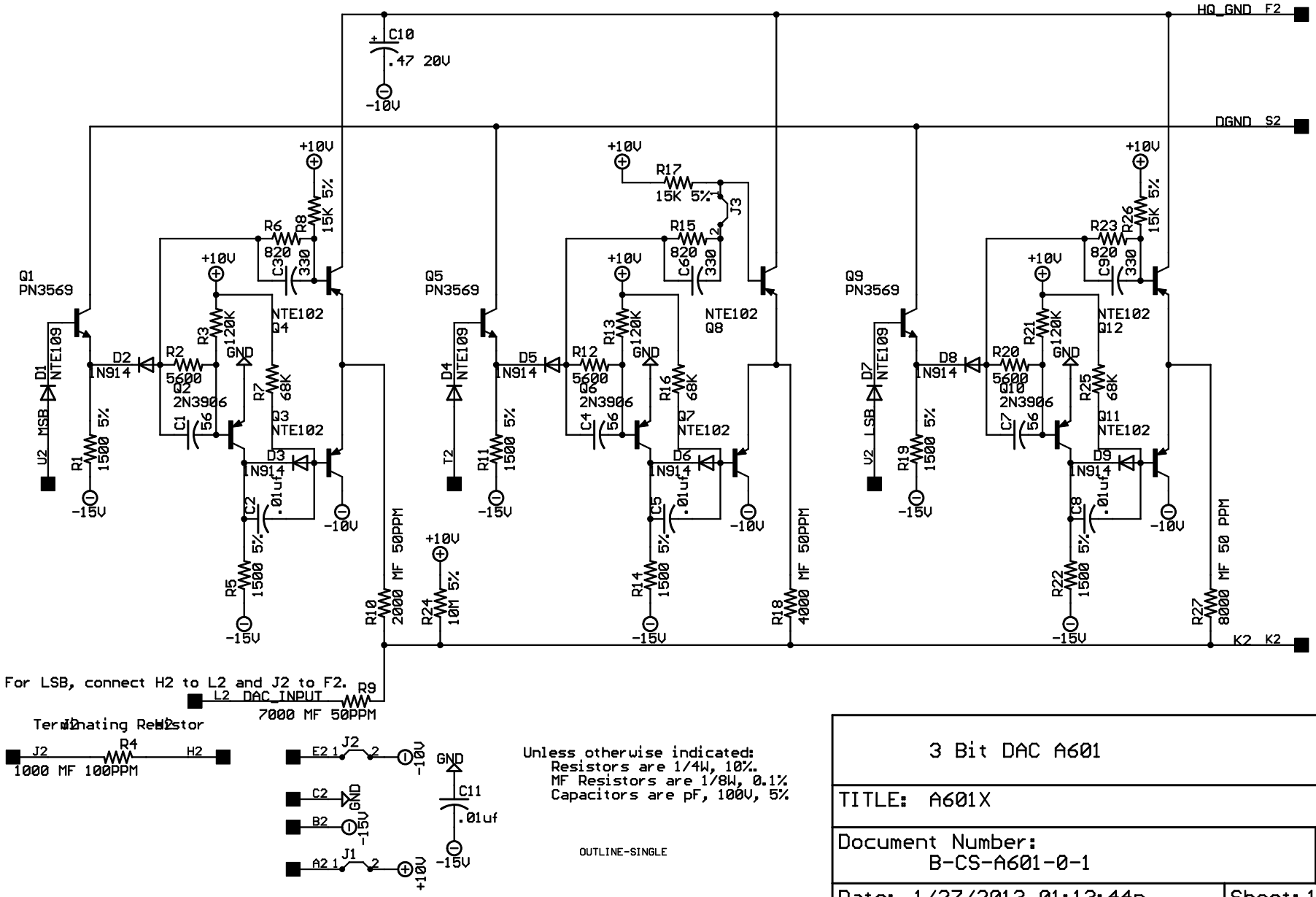

3 Bit DAC A601	
TITLE: A601X	
Document Number: B-CS-A601-0-1	REV: K
Date: 1/27/2013 01:13:44p	Sheet: 1/1