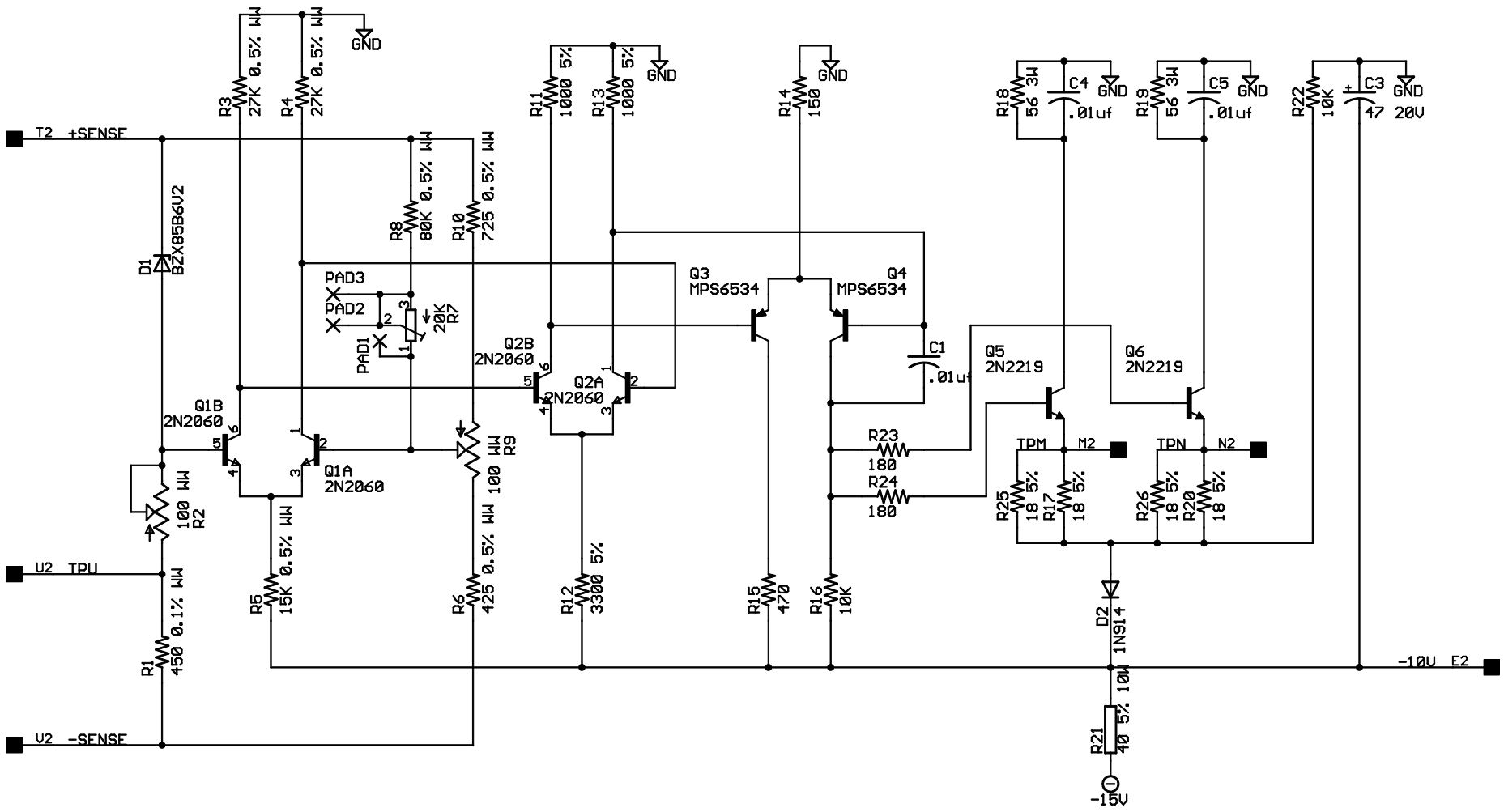

Unless otherwise indicated:
Resistors are 1/4W, 10%.
R1, R6, and R10 are 3PPM type 1195
R3, R4, R5, and R8 are 20PPM type 1283
R2 and R9 are 50PPM
R7 is a 275P

OUTLINE-DOUBLE

-10V Precision Power Supply A704	
TITLE: A704X	
Document Number: B-CS-A704-0-1	REV:
Date: 1/28/2013 10:13:18a	Sheet: 1/1