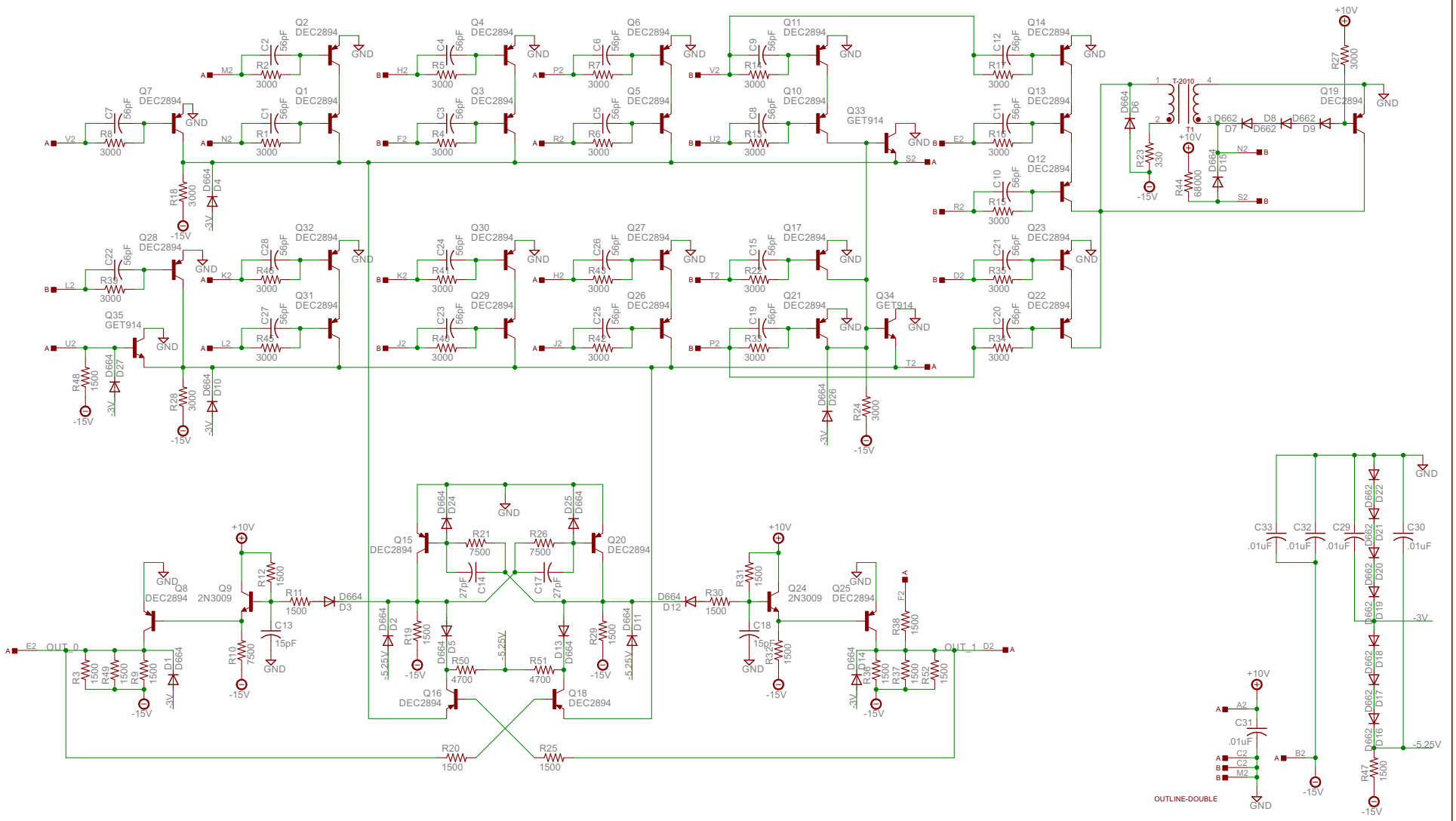

PDP-7 Accumulator

TITLE: B210B

Document Number: RS-C-B210-3

REV: 3

Date: 7/21/2019 12:59:13 AM

Sheet: 1/1