THIS SCHEMATIC IS FURNISHED ONLY FOR TEST AND MAINTENANCE PURPOSES. THE CIRCUITS ARE PROPRIETARY IN NATURE AND SHOULD BE TREATED ACCORDINGLY.
COPYRIGHT 1967 BY DIGITAL EQUIPMENT CORPORATION

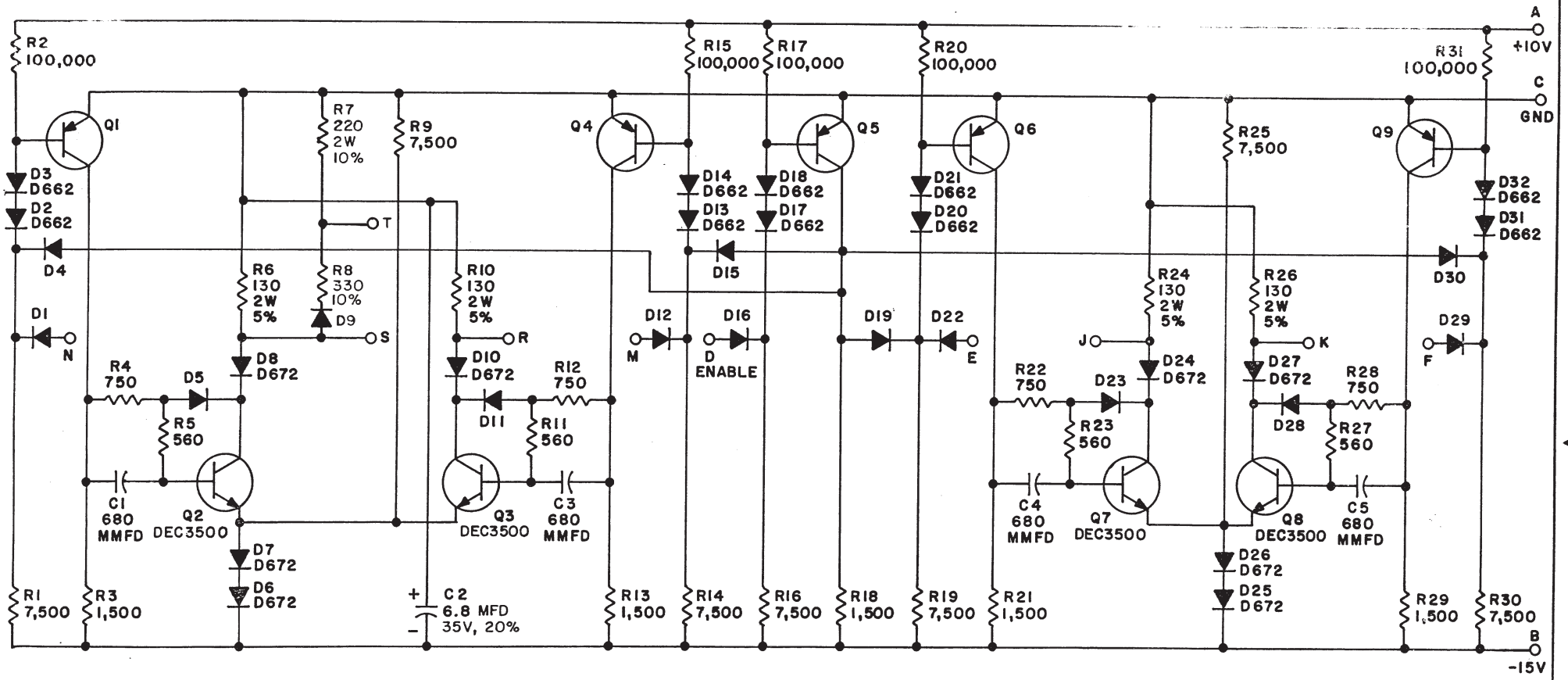

UNLESS OTHERWISE INDICATED:
TRANSISTORS ARE DEC6534B
DIODES ARE D664
RESISTORS ARE 1/4 W; 5%

REVISIONS		
CHK	CHG NO.	REV.
	6651	B

DRN. M. Haller	DATE 2-16-67	
CHK'D	DATE 2/16/67	
ENG.	DATE 2/16/67	
PROD.	DATE	

TRANSISTOR & DIODE CONVERSION CHART

DEC	EIA	DEC	EIA
DEC3500	2N3500		
DEC6534B	MPS6534		
D662	IN645		
D664	IN3606		
D672	IN3653		

digital EQUIPMENT CORPORATION
MAYNARD, MASSACHUSETTS

TITLE
WRITE DRIVER G287

SIZE	CODE	NUMBER	REV.
B	CS	G287-0-1	B

PRINTED CIRCUIT REV. B

DEC FORM NO.

SIZE B CODE CS NUMBER G287-0-1 REV. B