This drawing and specifications, herein, are the property of Digital Equipment Corporation and shall not be reproduced or copied or used in whole or in part as the basis for the manufacture or sale of items without written permission.

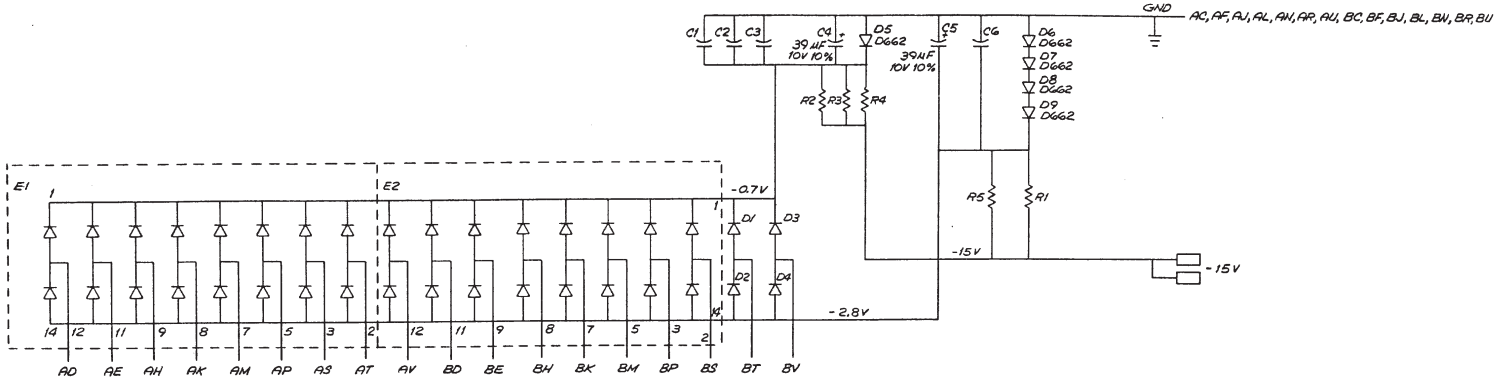

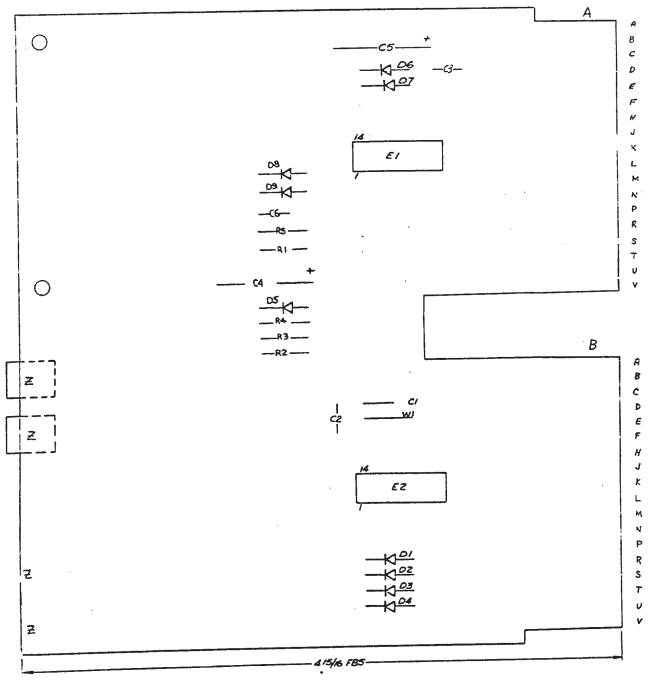

UNLESS OTHERWISE NOTED:
ALL RESISTORS ARE 1.5K ±5% 1/4 W C.C.
ALL CAPACITORS ARE .01µF ±20% 100 V DISC CERAMIC
ALL DIODES ARE D664
E1, E2 IS A DEC 2501

QTY	REF DESIGNATION	DESCRIPTION	PART NO.	ITEM NO.
2	E1, E2	IC DEC 2501	1910010	14
1		HANDLE, FLIP-CHIP, - GREEN	9008337-01	13
5	D5 THRU D9	DIODE D662	1100113	12
4	D1 THRU D4	DIODE D664	1100114	11
2	C4, C5	CAP 39µF 10V 10% TANT	1000076	10
4	C1, C2, C3, C6	CAP .01µF 100V 20% DISC	1001610	9
5	R1 THRU R5	RES 1.5K 1/4W 5% C.C.	1300391	8
2		EYELET GS4-5 E.B. STIMPSON	9009000	7
2		FASTON TAB #60145-1 AMP INC	9007112	6
2		EYELET #GS4-7 E.B. STIMPSON	9006732	5
1		ETCHED CIRCUIT BOARD	5010041	4
		MODULE ECO HISTORY	B-MH-G7000-0-6	3
		ASSY/DRILLING HOLE LAYOUT	D-AH-G7000-0-5	2
		X-Y COORDINATE HOLE LOCATION	K-CO-G7000-0-4	1

PARTS LIST

ETCH BOARD REV C

DEC NO.	EIA NO.	DEC NO.	EIA NO.
D664	1N3606		
D662	1N645		

SEMICONDUCTOR CONVERSION CHART

REVISIONS: REV A — CHANGE NO. — CHK — ORIGINATED

J. DREW 12-15-72
J. Hermann 10-27-72
G7000-0001 B

DRN. W. Stephenson DATE 4/13/72
CHKD. D. Neal DATE 4/17/72
ENG. J. E. Drew DATE 4/20/72
PROJ. ENG. J. E. Drew DATE 4/20/72
PROD. J. Arthur DATE 4/21/72
NEXT HIGHER ASSY PDP-10
SCALE
SHEET 1 OF 1

digital EQUIPMENT CORPORATION MAYNARD, MASSACHUSETTS

TITLE I/O BUS TERMINATOR #1

SIZE D CODE CS NUMBER G7000-0-1 REV. B

DIST.

DEC FORM NO. DRD-135