This drawing and specifications, herein, are the property of Digital Equipment Corporation and shall not be reproduced or copied or used in whole or in part as the basis for the manufacture or sale of items without written permission.

NOTES:

1. UNLESS OTHERWISE SPECIFIED, RESISTANCE IS IN OHMS, CAPACITANCE IS IN PICOFARADS.

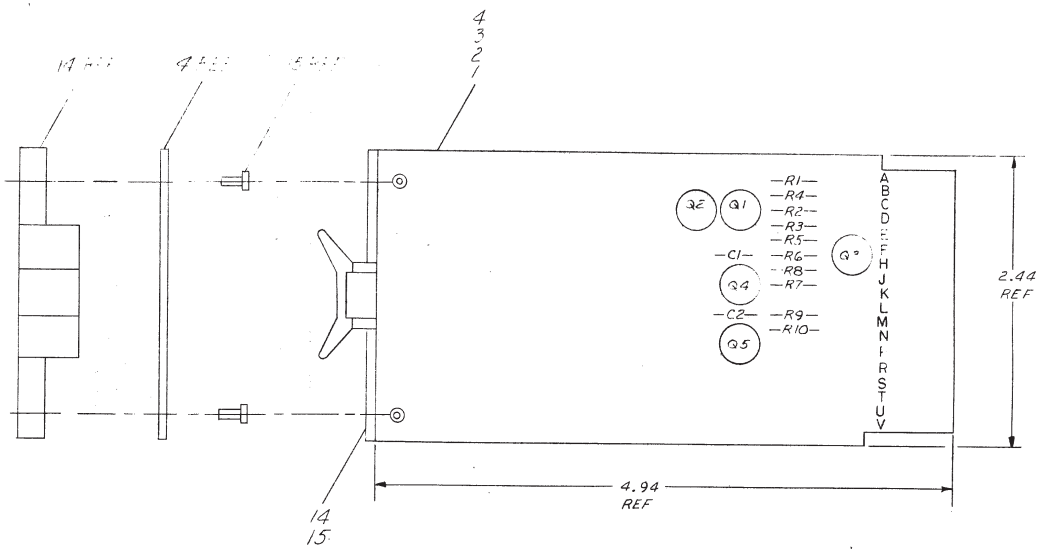

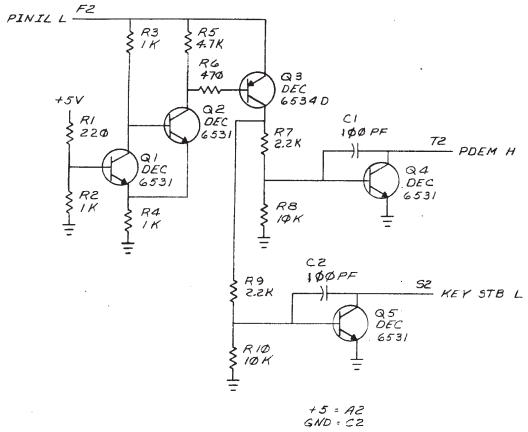

QTY	REF DESIGNATION	DESCRIPTION	PART NO.	ITEM NO.
2		EYELET, #GS-4-7 E.B. STIMPSON	9006732	15
1		HANDLE, FLIP CHIP, GREEN	9008337-1	14
1	Q3	TRANSISTOR DEC 6534D	1503409	13
4	Q1, Q2, Q4, Q5	TRANSISTOR DEC 6531	1509338	12
2	R8, R10	RES. 10K 1/4 W 5%	1300479	11
3	R2, R3, R4	RES. 1K 1/4 W 5%	1300365	10
1	R5	RES. 4.7K 1/4 W 5%	1300447	9
1	R1	RES. 220 1/4 W 5%	1300271	8
2	R7, R9	RES. 2.2K 1/4 W 5%	1300417	7
1	R6	RES 470 1/4 W 5%	1300316	6
2	C1, C2	CAP 100 PF, 300V, 5% DM	1000017	5
1		ETCHED CIRCUIT BOARD	5010190	4
REF		MODULE ECO HISTORY	B-MH-G8004-0-6	3
REF		ASSY/DRILLING HOLE LAYOUT	D-AH-G8004-0-5	2
REF		X-Y COORDINATE HOLE LOCATION	K-CO-G8004-0-4	1

PARTS LIST

FIRST USED ON OPTION MODEL

ETCH BOARD REV B

IC TYPE	GND	+ 5V

GND AND 5V ARE USUALLY PIN 7 AND 14 RESPECTIVELY EXCEPTIONS ARE STATED ABOVE

IC PIN LOCATIONS

DEC NO.	EIA NO.	DEC NO.	EIA NO.

SEMICONDUCTOR CONVERSION CHART

REVISIONS

CHK	CHANGE NO.	REV
DEB	G8004-00001	B

A. WILLIAMS 12-3-73

G8004-00002 C

C. YOUSE

DRN. DATE 6-21-72
CHK'D. DATE 6/23/72
ENG. DATE
PROJ. ENG. DATE
PROD. DATE
NEXT HIGHER ASSY
SCALE
SHEET 1 OF 1

digital EQUIPMENT CORPORATION MAYNARD, MASSACHUSETTS

TITLE POWER FAIL

SIZE L CODE CS NUMBER G8004-0-1 REV. C

DIST.

DEC FORM NO. ORD-135A

BRUNING 40-522 1H699