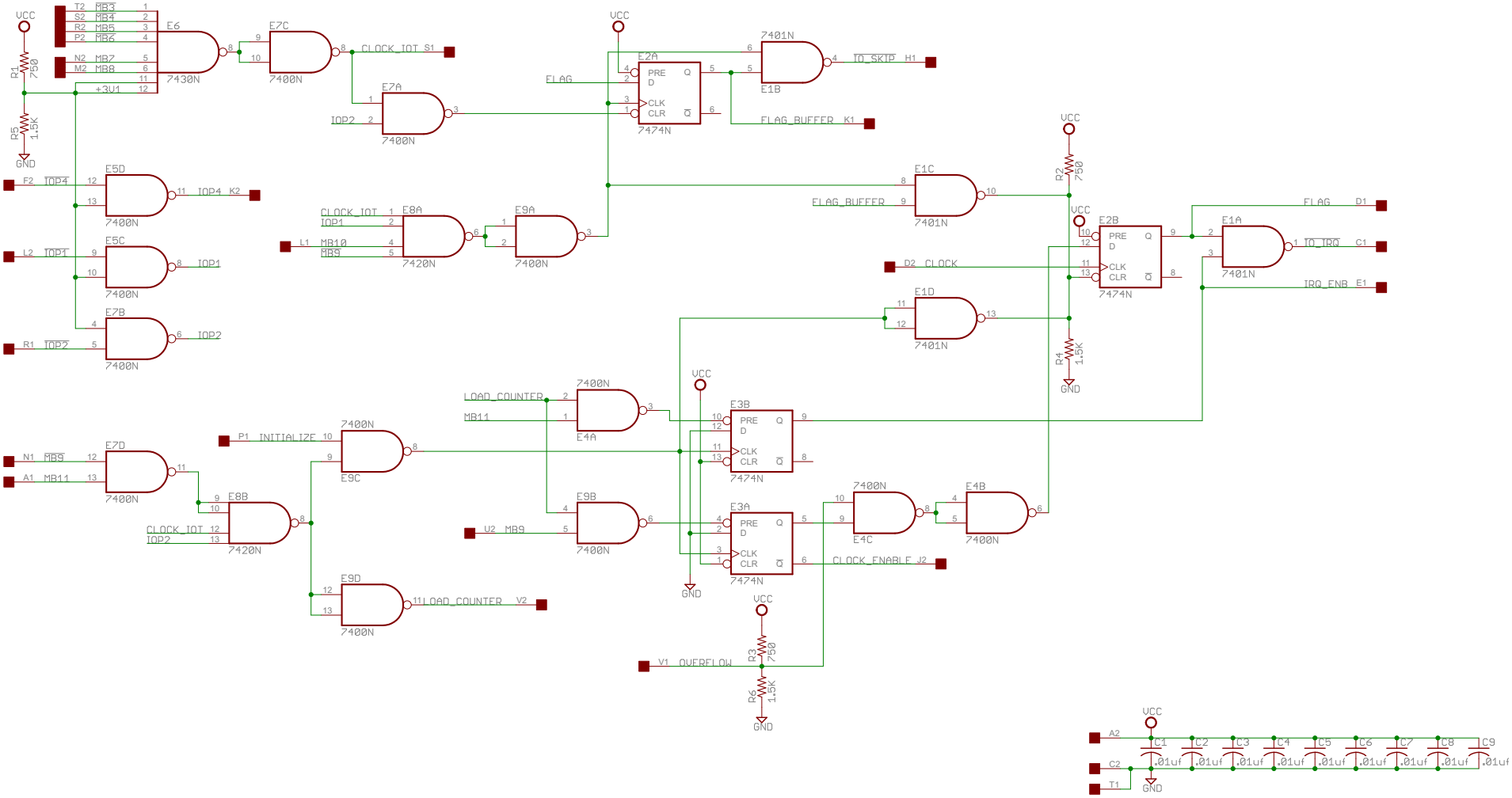

OUTLINE-SINGLE

Clock Control, 8/I	
TITLE: M708X	
Document Number: B-CS-M708-0-1	REV: B
Date: 2/20/2016 10:26:45 AM	Sheet: 1/1