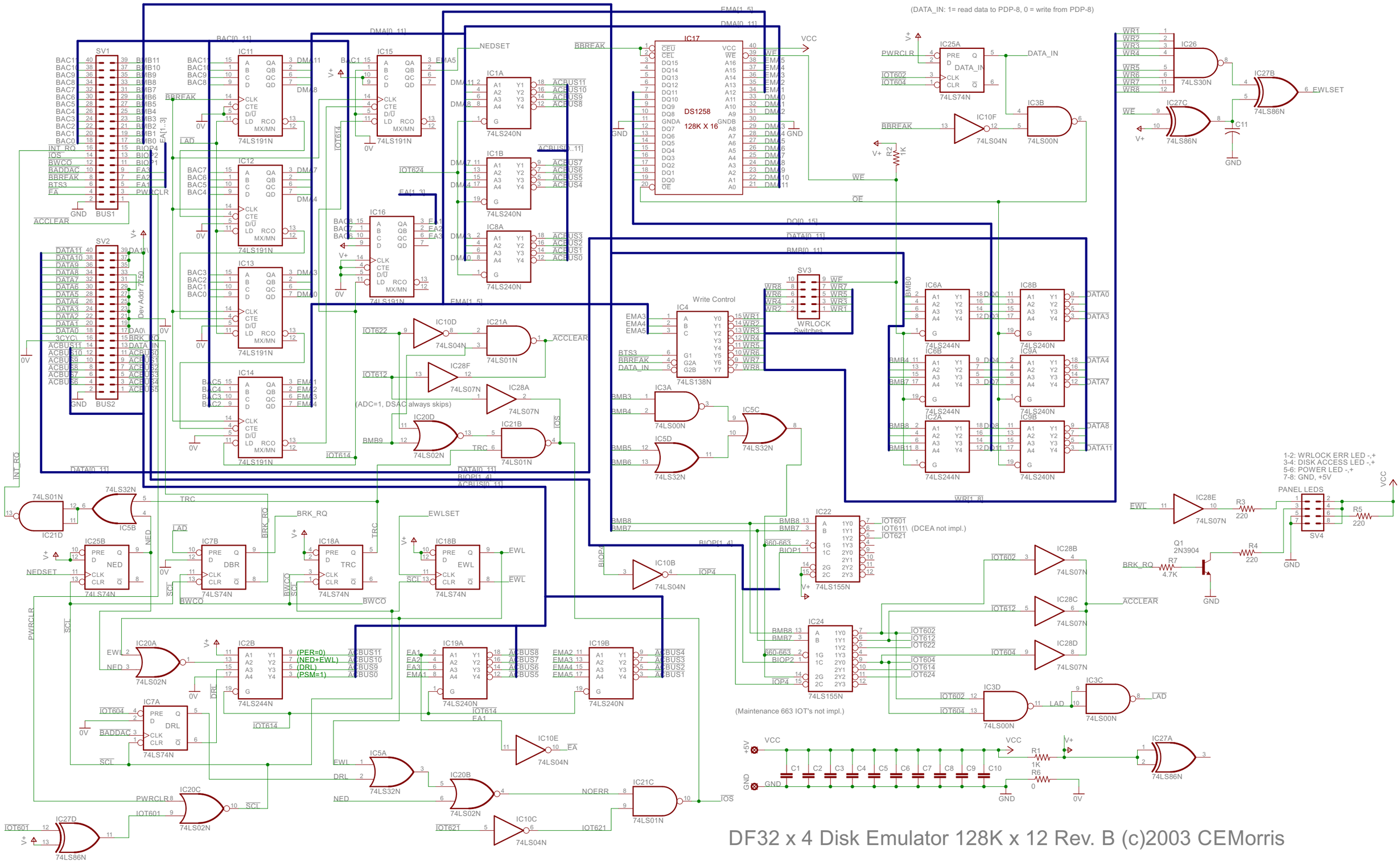

DF32 x 4 Disk Emulator 128K x 12 Rev. B (c)2003 CEMorris