"THE MATERIAL HEREIN IS FOR INFORMATION PURPOSES ONLY AND IS SUBJECT TO CHANGE WITHOUT NOTICE. DIGITAL EQUIPMENT CORPORATION ASSUMES NO RESPONSIBILITY FOR ANY ERRORS WHICH MAY APPEAR HEREIN."

FIELD MAINTENANCE PRINT SET

TABLE OF CONTENTS

VT72T FIELD MAINTENANCE PRINT SET	B-TC-VT72T-0-2
VT72T UNIT ASSY	A-PL-VT72T-0-0
16K 16 BIT DYNAMIC READ/WRITE MEMORY	A-PL-MSV11-DC-0
32K 16 BIT MOS MEM	D-CS-M8044-0-1
32K 16 BIT MOS MEM	D-UA-M8044-0-0
ASYN LINE INTERFACE	A-PL-DLV11-F-0
ASYN LINE INTERFACE	D-CS-M8028-0-1
ASYN LINE INTERFACE	D-UA-M8028-0-0
PACKAGING INSTRUCTIONS VT72/T DISPLAY	A-SP-3700364-0-0
VT72 FIELD MAINTENANCE PRINT SET	MP00613

UNIT VARIATIONS COVERED BY THIS PRINT SET
VT72T-AA
VT72T-AB
VT72T-BA
VT72T-BB

VT72T/VOL 2

Field Maintenance Print Set

Digital Equipment Corporation

PRINT SET ORDER NO.
MP00615

REVISIONS
REV.
CHG. NO.
DATE

USED ON OPTION/MODEL
VT72T

SHEET I OF 1

DRN. D. BRIGHAM — DATE 2MAR78
CHK'D Brigham — DATE 19 APR 78
PROJ. ENG. M Roosa — DATE 14 APR 78
FIELD SERV. P. Carroll — DATE 5 MAY 78

digital

TITLE: VT72T FIELD MAIN. PRINT SET

SIZE	CODE	NUMBER	REV.
B	TC	VT72T-0-2	

DIST.

EN-01124-16-N675-(327)

DRB 124

DIGITAL EQUIPMENT CORPORATION
MAYNARD, MASSACHUSETTS
PARTS LIST

MADE BY R. ROBICHAUD DATE 7 MAR 78	CHECKED A Brigham DATE 14 APR 78	SECTION 1
ENG M. Boose DATE 14 APR 78	PROD J. Walker DATE 14 APR 78	ISSUED SECT. 1

ITEM NO.	DWG NO./PART NO.	DESCRIPTION	VT72T-AA	VT72T-AB	VT72T-BA	VT72T-BB
1	E-UA-VT72-AA-0	VT72 BASIC ASSY (115V / 60HZ)	1	-	1	-
2	E-UA-VT72-AD-0	VT72 BASIC ASSY (230V/ 50HZ)	-	1	-	1
3	A-PL-MSV11-DC	16K 16 BIT DYNAMIC READ/WRITE MEMORY	1	1	2	2
4	A-PL-DLV11-F	SERIAL LINE UNIT	1	1	1	1
5	B-IA-7420034-0-0	LOGO VT72T	1	1	1	1
6						
7	A-SP-3700364-0-0	PACKAGING INSTRUCTIONS VT72T DISPLAY	1	1	1	1
8	A-PL-MRV11-VC	BOOTSTRAP	1	-	1	-
9	A-SP-99C6261-00	CARTON REG SLOTTED WITH FOAM	1	1	1	1

TITLE VT72T UNIT ASSY	ASSY NO.	SIZE A	CODE PL	NUMBER VT72T-0-0	REV	ECO NO.
	SHEET 1 OF 1	DIST				

DEC FORM
DRA 110

DIGITAL EQUIPMENT CORPORATION
MAYNARD, MASSACHUSETTS
PARTS LIST

MADE BY E.DEVRIES **DATE** 14-12-77	**CHECKED** R. GIVEN **DATE** 2-21-78	**SECTION**
ENG R. Given **DATE** 2-21-78	**PROD** R. Mattel **DATE** 2-21-78	**ISSUED SECT.**

ITEM NO.	DWG NO./PART NO.	DESCRIPTION	QUANTITY VARIATION MSV11-D
1	D-UA-M8044-0-0	MSV11-D (32K X 16) MOS MEMORY SYSTEM	1
2	D-BD-MSV11-D-4	MSV11-D/E BLOCK DIAGRAM	REF
3	D-FD-MSV11-D-5	MSV11-D/E FLOW DIAGRAM	REF
4	A-SP-MSV11-D-3	MSV11-D SYSTEM SPECIFICATION	REF
5	D-TD-MSV11-D-6	MSV11-D/E TIMING DIAGRAM	REF
6	A-PL-MSV11-D-7	MSV11-D SHIPPING LIST	REF

TITLE MSV11-D (32K - 16) MOS MEMORY SYSTEM	**ASSY NO.** B-DD-MSV11-D	**SIZE** A	**CODE** PL	**NUMBER** MSV11-D-0	**REV** *	**ECO NO.**
	SHEET 1 **OF** 1	**DIST**				

DEC FORM
DRA 110

"THIS DRAWING AND SPECIFICATIONS, HEREIN, ARE THE PROPERTY OF DIGITAL [illegible] AND SHALL NOT BE [illegible] OR IN [illegible] OR SALE OF [illegible]
COPYRIGHT © 1977, DIGITAL EQUIPMENT CORPORATION"

NOTES:

1. ⊗ = WIRE WRAP PIN

2.

TYPE MEMORY	JUMPER CONFIGURATION
NON PARITY	5 TO 7
PARITY	5 TO 6

3.

TYPE	JUMPER CONFIGURATION
4K	17 TO 15 & 17 TO 14
8K	17 TO 15 & 12 TO 14
16K	16 TO 15 & 16 TO 14
32K	16 TO 15 & 10 TO 14

4.

STARTING ADDRESS		SWITCH SETTING (X = OFF)				
DEC (K)	OCTAL	S1-1	S1-2	S1-3	S1-4	S1-5
0	000000					
4	020000					X
8	040000				X	
12	060000				X	X
16	100000			X		
20	120000			X		X
24	140000			X	X	
28	160000			X	X	X
32	200000		X			
36	220000		X			X
40	240000		X		X	
44	260000		X		X	X
48	300000		X	X		
52	320000		X	X		X
56	340000		X	X	X	
60	360000		X	X	X	X
64	400000	X				
68	420000	X				X
72	440000	X			X	
76	460000	X			X	X
80	500000	X		X		
84	520000	X		X		X
88	540000	X		X	X	
92	560000	X		X	X	X
96	600000	X	X			
100	620000	X	X			X
104	640000	X	X		X	
108	650000	X	X		X	X
112	700000	X	X	X		
116	720000	X	X	X		X
120	740000	X	X	X	X	
124	760000	X	X	X	X	X

5. NORMAL JUMPER 1 TO 3.
OPTIONAL JUMPER 1 TO 2
WILL ALLOW USER TO EXTEND USABLE
MEMORY SPACE FROM 28K TO 30K.

6.

JUMPER	BATTERY BACK-UP	NON BATTERY BACK-UP
W2	OUT	IN
W3	OUT	IN
W4	IN	OUT
W5	IN	OUT

7.

MEMORY SIZE	W1	R3
4K	IN	OUT
8K	IN	OUT
16K	OUT	IN
32K	OUT	IN

8.

OPTION DESIGNATION	PRIMARY VARIATION	SYSTEM DESCRIPTION
MSV11-DA	M8044-AA	4K × 16 BITS
MSV11-DB	M8044-BA	8K × 16 BITS
MSV11-DC	M8044-CA	16K × 16 BITS
MSV11-DD	M8044-DA	32K × 16 BITS

9.

IC TYPE	+5V	GND	+12V	-5V
555		1	8	
MOS	9	16	8	1
74S373	20	10		
74LS393	14	7		
74S280	14	7		
74S74	14	7		
74S10	14	7		
74S11	14	7		
8641	16	8		
8640	8	1		
74S240	20	10		
74S37	14	7		
74S22	14	7		
1K×4 PROM	18	9		
74S02	14	7		
74LS75	5	12		
74S32	14	7		
74LS10	14	7		
74LS240	20	10		

10. THESE I.C'S USED ONLY IN 8K & 32K CONFIG'S.

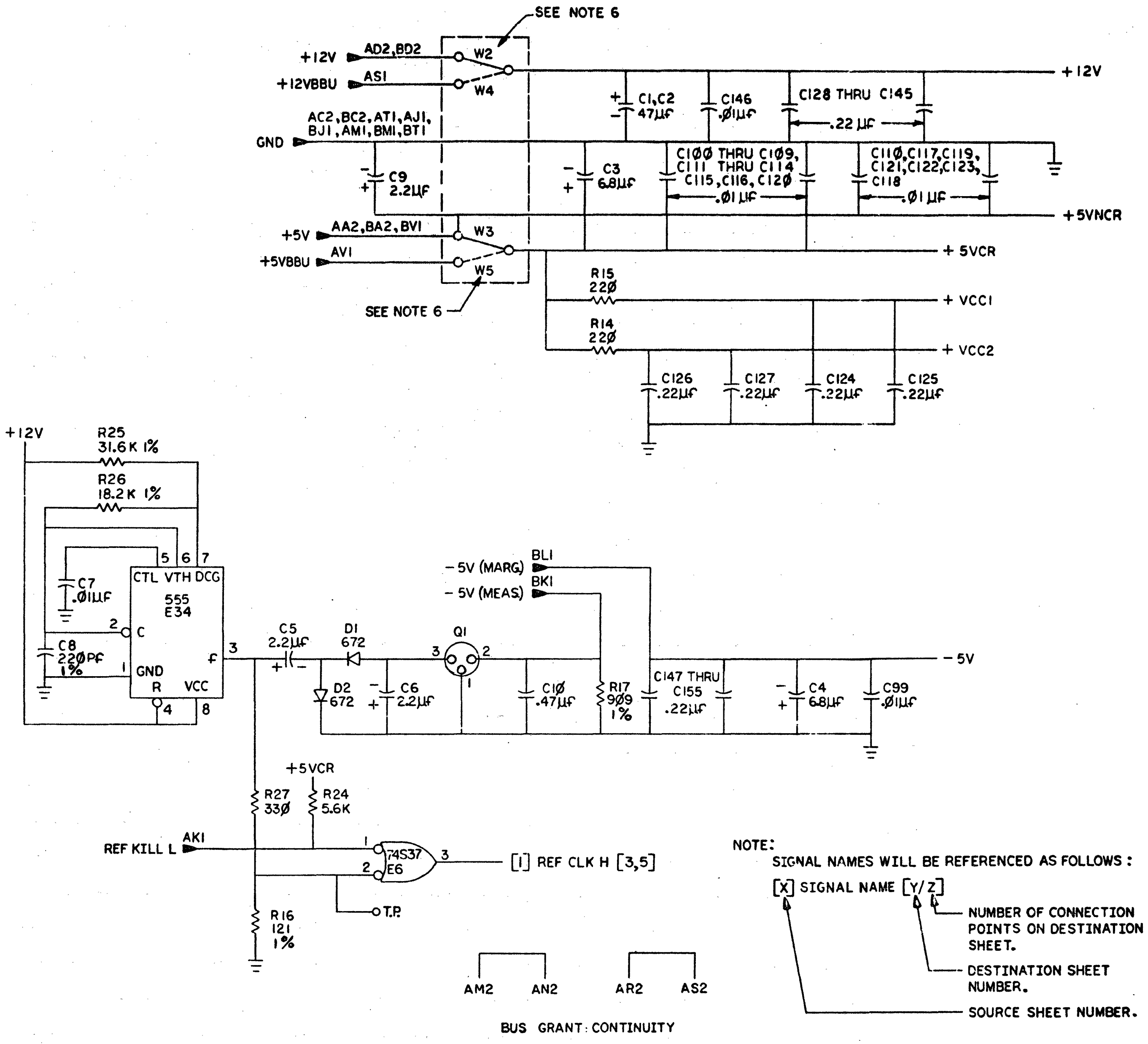
SEE NOTE 6
+12V
AD2,BD2
W2
+12VBBU
AS1
W4
AC2,BC2,AT1,AJ1,
BJ1,AM1,BM1,BT1
GND
C9
2.2µF
C1,C2
47µF
C146
.01µF
C128 THRU C145
.22 µF
+12V
C3
6.8µF
C100 THRU C109,
C111 THRU C114
C115,C116,C120
.01 µF
C110,C117,C119,
C121,C122,C123,
C118
.01 µF
+5VNCR
+5V
AA2,BA2,BV1
W3
+5VBBU
AV1
W5
+5VCR
R15
220
+VCC1
R14
220
+VCC2
SEE NOTE 6
C126
.22µF
C127
.22µF
C124
.22µF
C125
.22µF
+12V
R25
31.6K 1%
R26
18.2K 1%
5
6
7
CTL VTH DCG
555
E34
C7
.01µF
2
C
C8
220PF
1%
1
GND
R
VCC
4
8
3
C5
2.2µF
D1
672
D2
672
C6
2.2µF
Q1
3
2
1
-5V (MARG)
BL1
-5V (MEAS)
BK1
C10
.47µF
R17
909
1%
C147 THRU
C155
.22µF
C4
6.8µF
C99
.01µF
-5V
+5VCR
R27
330
R24
5.6K
REF KILL L
AK1
1
2
74S37
E6
3
[1] REF CLK H [3,5]
T.P.
R16
121
1%
AM2
AN2
AR2
AS2
BUS GRANT: CONTINUITY

NOTE:
SIGNAL NAMES WILL BE REFERENCED AS FOLLOWS:

[X] SIGNAL NAME [Y/Z]

- NUMBER OF CONNECTION POINTS ON DESTINATION SHEET.
- DESTINATION SHEET NUMBER.
- SOURCE SHEET NUMBER.

REVISIONS		
CHK	CHANGE NO.	REV.
KR	M8044-00001	B
Steve Miller 1 MAY 78		
R. GIVEN		
R. Given	RM 6-2-78	
C.B.	M8044 ML002	C
C. Bouchard 13 DEC 78		
R. GIVEN		
R. Given	RM 27-DEC-78	

MAKEPEACE P-1888

DEC FORM NO.
DRD 102-0

DRN Steve Garrity	10-25-77	FIRST USED ON MSV11-D	digital
CHKD R. GIVEN	2-21-78	TITLE 32K 16BIT MOS MEM	
ENG. R. GIVEN	2-21-78		
PROJ. ENG. R. Given	2-21-78		
PROD. R.	2-21-78		
NEXT HIGHER ASSY. B-DD-M8044-0			
SCALE		SIZE D	CODE CS
SHEET 1 OF 7		DIST.	

NUMBER M8044-0-1
REV. C

ML 1

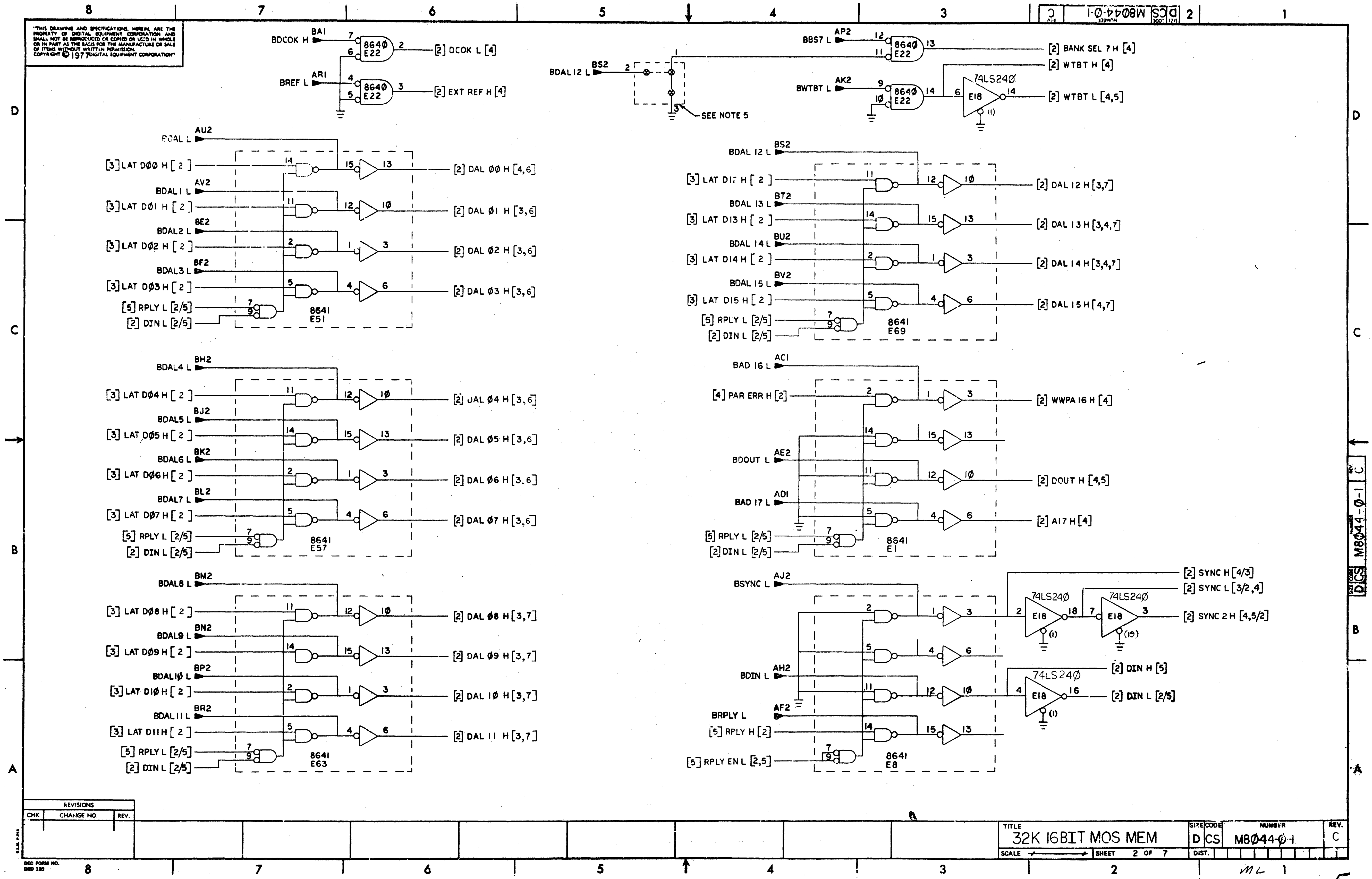

BDCOK H
BA1
8640 E22
[2] DCOK L [4]
BREF L
AR1
[2] EXT REF H [4]
BDAL12 L
BS2
SEE NOTE 5
BBS7 L
AP2
[2] BANK SEL 7 H [4]
[2] WTBT H [4]
BWTBT L
AK2
74LS240
E18
[2] WTBT L [4,5]
BDAL L
AU2
[3] LAT D00 H [2]
[2] DAL 00 H [4,6]
BDAL1 L
AV2
[3] LAT D01 H [2]
[2] DAL 01 H [3,6]
BDAL2 L
BE2
[3] LAT D02 H [2]
[2] DAL 02 H [3,6]
BDAL3 L
BF2
[3] LAT D03 H [2]
[2] DAL 03 H [3,6]
[5] RPLY L [2/5]
[2] DIN L [2/5]
8641 E51
BDAL4 L
BH2
[3] LAT D04 H [2]
[2] DAL 04 H [3,6]
BDAL5 L
BJ2
[3] LAT D05 H [2]
[2] DAL 05 H [3,6]
BDAL6 L
BK2
[3] LAT D06 H [2]
[2] DAL 06 H [3,6]
BDAL7 L
BL2
[3] LAT D07 H [2]
[2] DAL 07 H [3,6]
8641 E57
BDAL8 L
BM2
[3] LAT D08 H [2]
[2] DAL 08 H [3,7]
BDAL9 L
BN2
[3] LAT D09 H [2]
[2] DAL 09 H [3,7]
BDAL10 L
BP2
[3] LAT D10 H [2]
[2] DAL 10 H [3,7]
BDAL11 L
BR2
[3] LAT D11 H [2]
[2] DAL 11 H [3,7]
8641 E63
BDAL 12 L
BS2
[3] LAT D12 H [2]
[2] DAL 12 H [3,7]
BDAL 13 L
BT2
[3] LAT D13 H [2]
[2] DAL 13 H [3,4,7]
BDAL 14 L
BU2
[3] LAT D14 H [2]
[2] DAL 14 H [3,4,7]
BDAL 15 L
BV2
[3] LAT D15 H [2]
[2] DAL 15 H [4,7]
8641 E69
BAD 16 L
AC1
[4] PAR ERR H [2]
[2] WWPA 16 H [4]
BDOUT L
AE2
[2] DOUT H [4,5]
BAD 17 L
AD1
[2] A17 H [4]
8641 E1
BSYNC L
AJ2
[2] SYNC H [4/3]
[2] SYNC L [3/2,4]
74LS240
E18
[2] SYNC 2 H [4,5/2]
BDIN L
AH2
[2] DIN H [5]
[2] DIN L [2/5]
BRPLY L
AF2
[5] RPLY H [2]
[5] RPLY EN L [2,5]
8641 E8
8
7
6
5
4
3
2
1
D
C
B
A
D CS M8044-0-1 C

REVISIONS		
CHK	CHANGE NO.	REV.

TITLE	SIZE	CODE	NUMBER	REV.
32K 16BIT MOS MEM	D	CS	M8044-0-1	C
SCALE	SHEET 2 OF 7	DIST.		

DEC FORM NO. DRD 138

ML

5

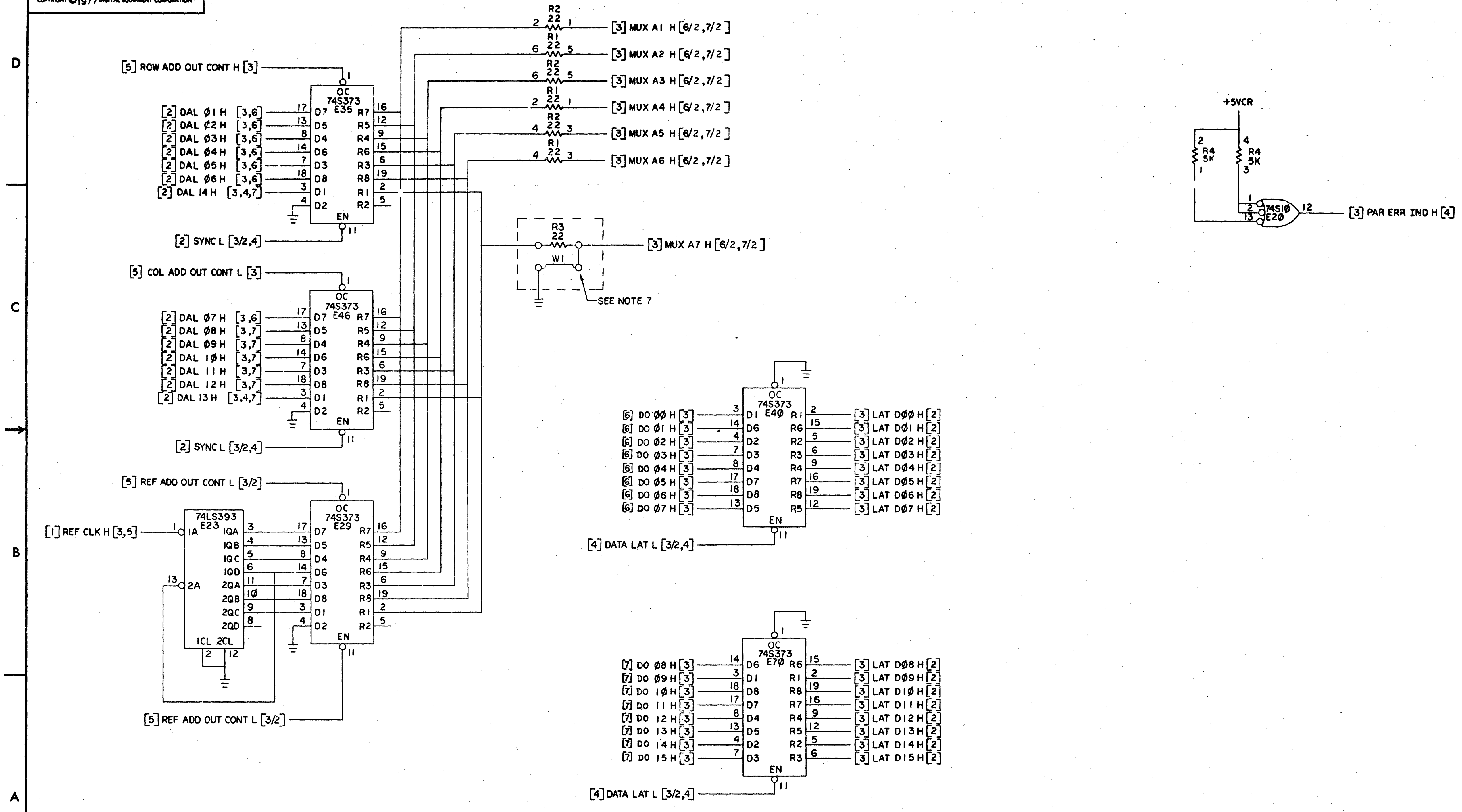
[5] ROW ADD OUT CONT H [3]
[2] DAL 01 H [3,6]
[2] DAL 02 H [3,6]
[2] DAL 03 H [3,6]
[2] DAL 04 H [3,6]
[2] DAL 05 H [3,6]
[2] DAL 06 H [3,6]
[2] DAL 14 H [3,4,7]
OC 74S373 E35
[2] SYNC L [3/2,4]
[5] COL ADD OUT CONT L [3]
[2] DAL 07 H [3,6]
[2] DAL 08 H [3,7]
[2] DAL 09 H [3,7]
[2] DAL 10 H [3,7]
[2] DAL 11 H [3,7]
[2] DAL 12 H [3,7]
[2] DAL 13 H [3,4,7]
OC 74S373 E46
[2] SYNC L [3/2,4]
[5] REF ADD OUT CONT L [3/2]
[1] REF CLK H [3,5]
74LS393 E23
OC 74S373 E29
[5] REF ADD OUT CONT L [3/2]
R2 22
R1 22
[3] MUX A1 H [6/2,7/2]
[3] MUX A2 H [6/2,7/2]
[3] MUX A3 H [6/2,7/2]
[3] MUX A4 H [6/2,7/2]
[3] MUX A5 H [6/2,7/2]
[3] MUX A6 H [6/2,7/2]
R3 22
W1
[3] MUX A7 H [6/2,7/2]
SEE NOTE 7
+5VCR
R4 5K
74S10 E20
[3] PAR ERR IND H [4]
OC 74S373 E40
[6] DO 00 H [3]
[6] DO 01 H [3]
[6] DO 02 H [3]
[6] DO 03 H [3]
[6] DO 04 H [3]
[6] DO 05 H [3]
[6] DO 06 H [3]
[6] DO 07 H [3]
[3] LAT D00 H [2]
[3] LAT D01 H [2]
[3] LAT D02 H [2]
[3] LAT D03 H [2]
[3] LAT D04 H [2]
[3] LAT D05 H [2]
[3] LAT D06 H [2]
[3] LAT D07 H [2]
[4] DATA LAT L [3/2,4]
OC 74S373 E70
[7] DO 08 H [3]
[7] DO 09 H [3]
[7] DO 10 H [3]
[7] DO 11 H [3]
[7] DO 12 H [3]
[7] DO 13 H [3]
[7] DO 14 H [3]
[7] DO 15 H [3]
[3] LAT D08 H [2]
[3] LAT D09 H [2]
[3] LAT D10 H [2]
[3] LAT D11 H [2]
[3] LAT D12 H [2]
[3] LAT D13 H [2]
[3] LAT D14 H [2]
[3] LAT D15 H [2]
[4] DATA LAT L [3/2,4]

REVISIONS		
CHK	CHANGE NO.	REV.

TITLE 32K 16BIT MOS MEM

SIZE D CODE CS NUMBER M8044-0-1 REV. C

SCALE — SHEET 3 OF 7

DIST.

DEC FORM NO. DRD 13B

ML

6

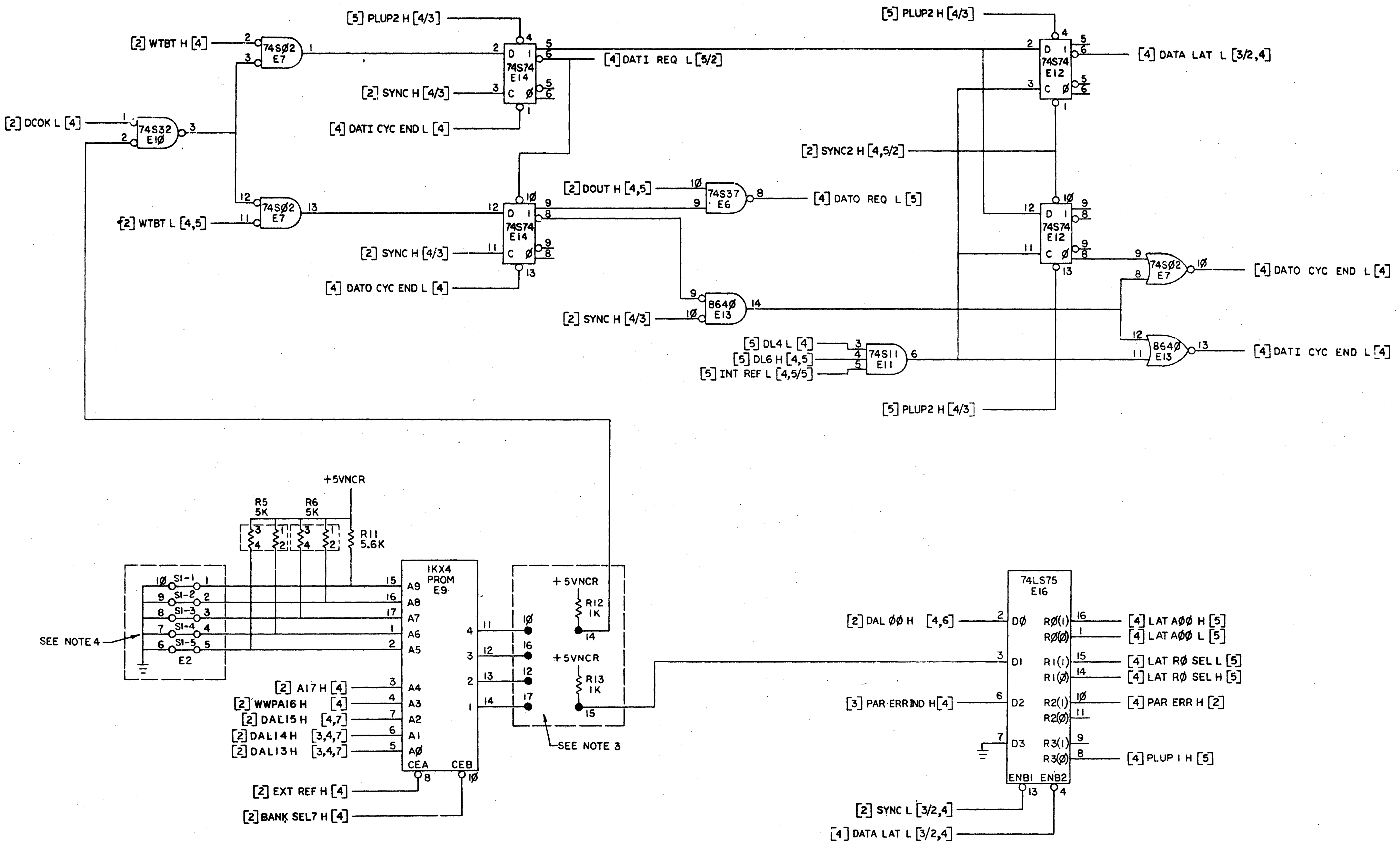
[5] PLUP2 H [4/3]
[2] WTBT H [4]
74S02 E7
[4] DATI REQ L [5/2]
74S74 E14
[2] SYNC H [4/3]
[4] DATI CYC END L [4]
[2] DCOK L [4]
74S32 E10
[2] WTBT L [4,5]
[2] DOUT H [4,5]
74S37 E6
[4] DATO REQ L [5]
[4] DATO CYC END L [4]
8640 E13
[5] DL4 L [4]
[5] DL6 H [4,5]
[5] INT REF L [4,5/5]
74S11 E11
[5] PLUP2 H [4/3]
[4] DATA LAT L [3/2,4]
74S74 E12
[2] SYNC2 H [4,5/2]
74S02 E7
[4] DATO CYC END L [4]
8640 E13
[4] DATI CYC END L [4]
D
C
+5VNCR
R5 5K
R6 5K
R11 5.6K
S1-1
S1-2
S1-3
S1-4
S1-5
E2
SEE NOTE 4
1KX4 PROM E9
A9 A8 A7 A6 A5 A4 A3 A2 A1 A0
CEA CEB
[2] A17 H [4]
[2] WWPA16 H [4]
[2] DAL15 H [4,7]
[2] DAL14 H [3,4,7]
[2] DAL13 H [3,4,7]
[2] EXT REF H [4]
[2] BANK SEL7 H [4]
+5VNCR
R12 1K
+5VNCR
R13 1K
SEE NOTE 3
74LS75 E16
D0 D1 D2 D3
R0(1) R0(0) R1(1) R1(0) R2(1) R2(0) R3(1) R3(0)
ENB1 ENB2
[2] DAL 00 H [4,6]
[3] PAR ERRIND H [4]
[2] SYNC L [3/2,4]
[4] DATA LAT L [3/2,4]
[4] LAT A00 H [5]
[4] LAT A00 L [5]
[4] LAT R0 SEL L [5]
[4] LAT R0 SEL H [5]
[4] PAR ERR H [2]
[4] PLUP 1 H [5]

D CS M8044-0-1 C

REVISIONS		
CHK	CHANGE NO.	REV.

TITLE	SIZE	CODE	NUMBER	REV.
32K 16 BIT MOS MEM	D	CS	M8044-0-1	C
SCALE —/—/— SHEET 4 OF 7	DIST.			

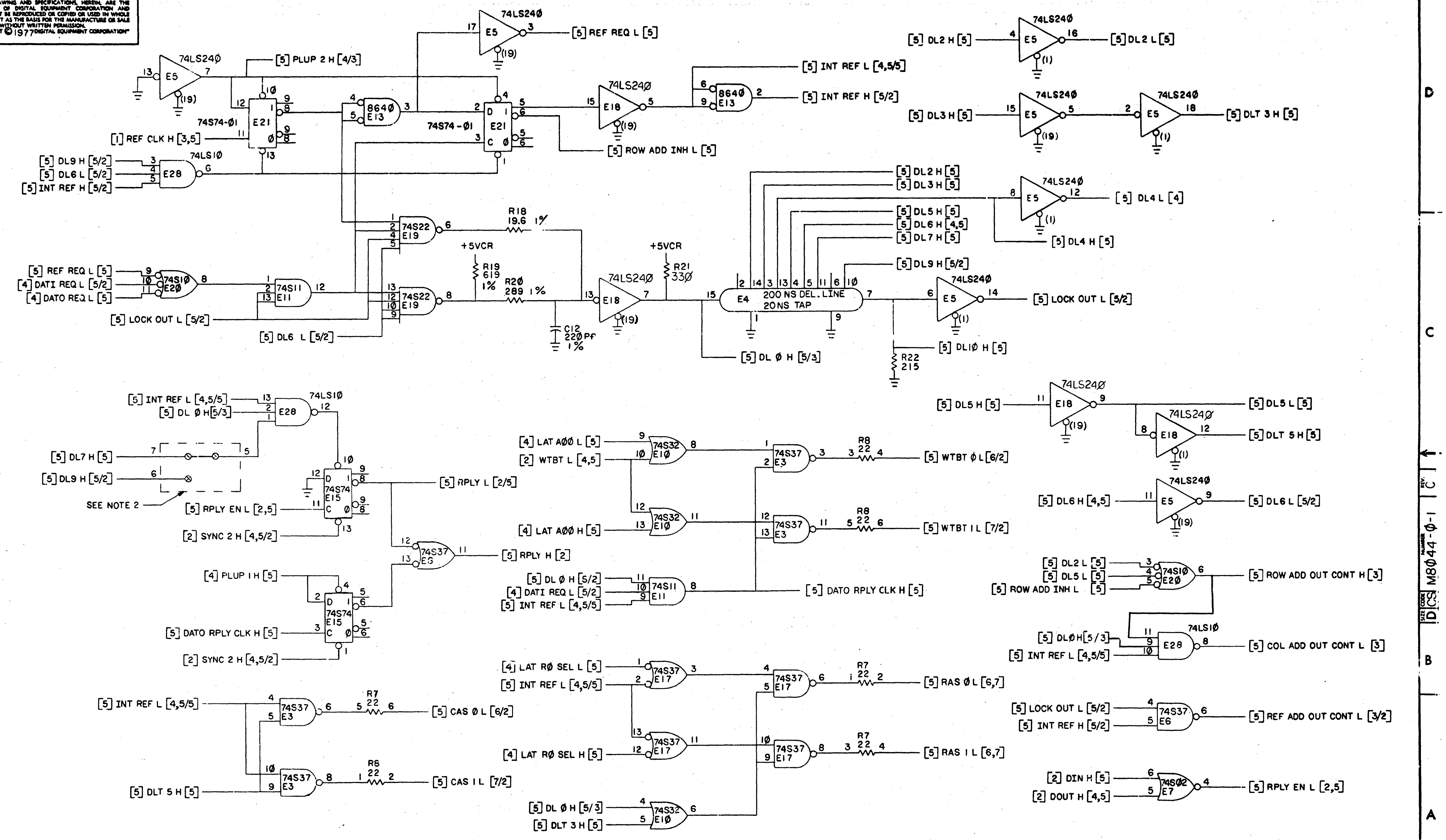

[5] REF REQ L [5]
[5] PLUP 2 H [4/3]
[1] REF CLK H [3,5]
[5] DL9 H [5/2]
[5] DL6 L [5/2]
[5] INT REF H [5/2]
[5] INT REF L [4,5/5]
[5] ROW ADD INH L [5]
[5] DL2 H [5]
[5] DL2 L [5]
[5] DL3 H [5]
[5] DLT 3 H [5]
[5] DL4 L [4]
[5] DL4 H [5]
[5] DL5 H [5]
[5] DL6 H [4,5]
[5] DL7 H [5]
[5] DL9 H [5/2]
[5] LOCK OUT L [5/2]
[5] DL10 H [5]
[5] DL 0 H [5/3]
[4] DATI REQ L [5/2]
[4] DATO REQ L [5]
[5] DL6 L [5/2]
200 NS DEL. LINE
20NS TAP
+5VCR
R18 19.6 1%
R19 619 1%
R20 289 1%
R21 330
R22 215
C12 220PF 1%
74LS240
74S74-01
8640
74LS10
74S22
74S10
74S11
74S74
74S37
74S32
74S02
[5] DL5 L [5]
[5] DLT 5 H [5]
[5] DL6 L [5/2]
[5] DL7 H [5]
SEE NOTE 2
[5] RPLY L [2/5]
[5] RPLY EN L [2,5]
[2] SYNC 2 H [4,5/2]
[5] RPLY H [2]
[4] PLUP 1 H [5]
[5] DATO RPLY CLK H [5]
[4] LAT A00 L [5]
[2] WTBT L [4,5]
[4] LAT A00 H [5]
[5] WTBT 0 L [6/2]
[5] WTBT 1 L [7/2]
R8 22
[5] DL 0 H [5/2]
[5] INT REF L [4,5/5]
[4] LAT R0 SEL L [5]
[4] LAT R0 SEL H [5]
[5] RAS 0 L [6,7]
[5] RAS 1 L [6,7]
R7 22
[5] CAS 0 L [6/2]
[5] CAS 1 L [7/2]
R6 22
[5] DLT 5 H [5]
[5] DLT 3 H [5]
[5] ROW ADD OUT CONT H [3]
[5] ROW ADD INH L [5]
[5] DL0H[5/3]
[5] COL ADD OUT CONT L [3]
[5] REF ADD OUT CONT L [3/2]
[2] DIN H [5]
[2] DOUT H [4,5]
[5] RPLY EN L [2,5]

REVISIONS		
CHK	CHANGE NO.	REV.

TITLE
32K 16BIT MOS MEM

SIZE	CODE	NUMBER	REV.
D	CS	M8044-0-1	C

SCALE —/— SHEET 5 OF 7

DIST.

D CS M8044-0-1 C

1 ml

8

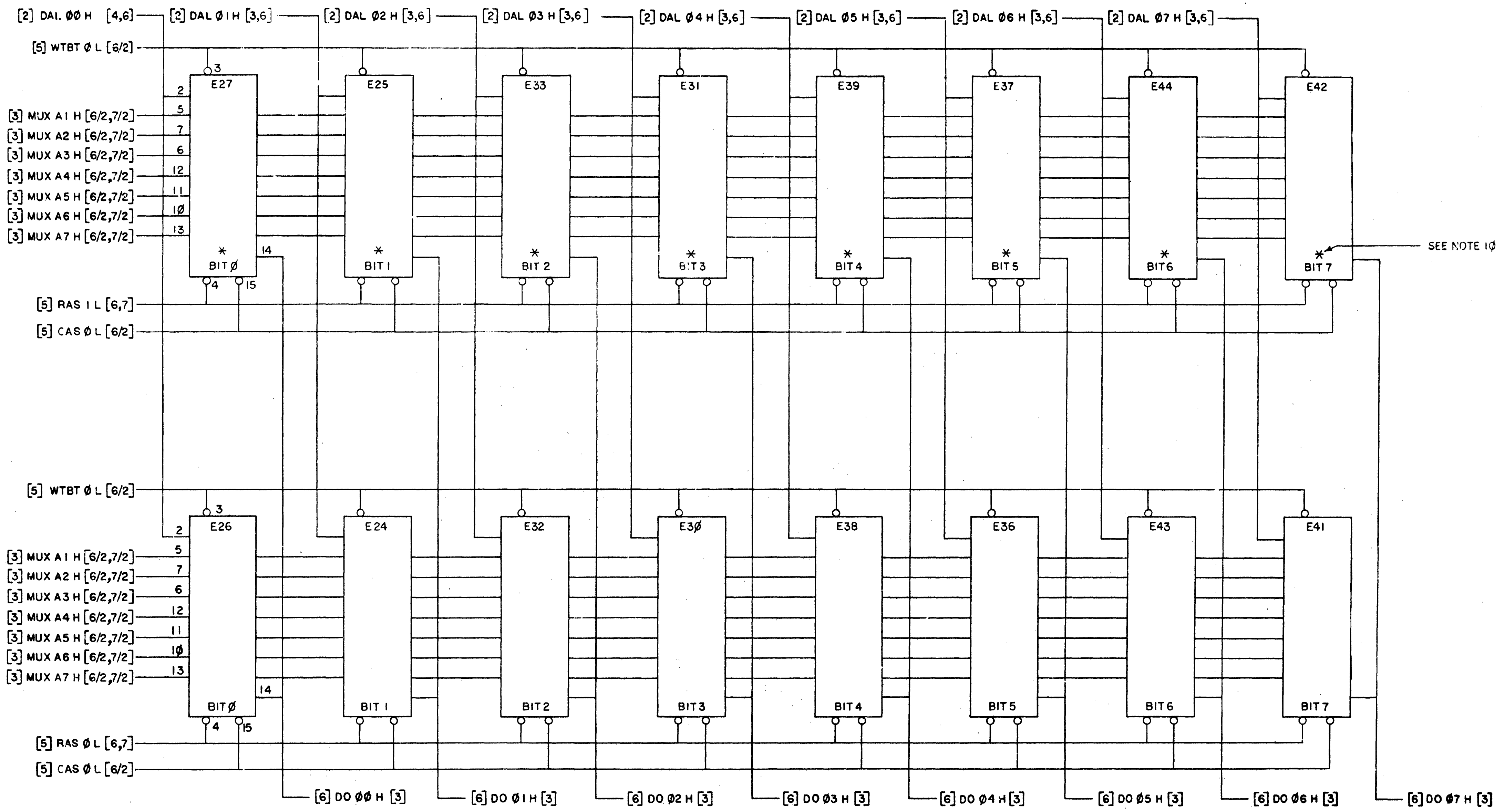
[2] DAL 00 H [4,6]
[2] DAL 01 H [3,6]
[2] DAL 02 H [3,6]
[2] DAL 03 H [3,6]
[2] DAL 04 H [3,6]
[2] DAL 05 H [3,6]
[2] DAL 06 H [3,6]
[2] DAL 07 H [3,6]
[5] WTBT 0 L [6/2]
[3] MUX A1 H [6/2,7/2]
[3] MUX A2 H [6/2,7/2]
[3] MUX A3 H [6/2,7/2]
[3] MUX A4 H [6/2,7/2]
[3] MUX A5 H [6/2,7/2]
[3] MUX A6 H [6/2,7/2]
[3] MUX A7 H [6/2,7/2]
E27
E25
E33
E31
E39
E37
E44
E42
BIT 0
BIT 1
BIT 2
BIT 3
BIT 4
BIT 5
BIT 6
BIT 7
SEE NOTE 10
[5] RAS 1 L [6,7]
[5] CAS 0 L [6/2]
[5] WTBT 0 L [6/2]
E26
E24
E32
E30
E38
E36
E43
E41
[5] RAS 0 L [6,7]
[5] CAS 0 L [6/2]
[6] DO 00 H [3]
[6] DO 01 H [3]
[6] DO 02 H [3]
[6] DO 03 H [3]
[6] DO 04 H [3]
[6] DO 05 H [3]
[6] DO 06 H [3]
[6] DO 07 H [3]
2
3
4
5
6
7
10
11
12
13
14
15

VCC1 — E26,E27,E32,E33,E38,E39,E43,E44, E55,E56,E61,E62,E67,E68,E73,E74
VCC2 — E24,E25,E30,E31,E36,E37,E41,E42, E53,E54,E59,E60,E65,E66,E71,E72
+5VNCR-E1, E8, E9, E15,E16,E45,E51,E52,E57,E58,E63,E64,E69,E70
+5VCR—E3 THRU E7, E10 THRU E14, E17 THRU E23,E28,E29,E35,E40,E46

REVISIONS		
CHK	CHANGE NO.	REV.

TITLE 32K 16BIT MOS MEM
SIZE D CODE CS NUMBER M8044-0-1 REV. C
SCALE
SHEET 6 OF 7
DIST.

1ML

9

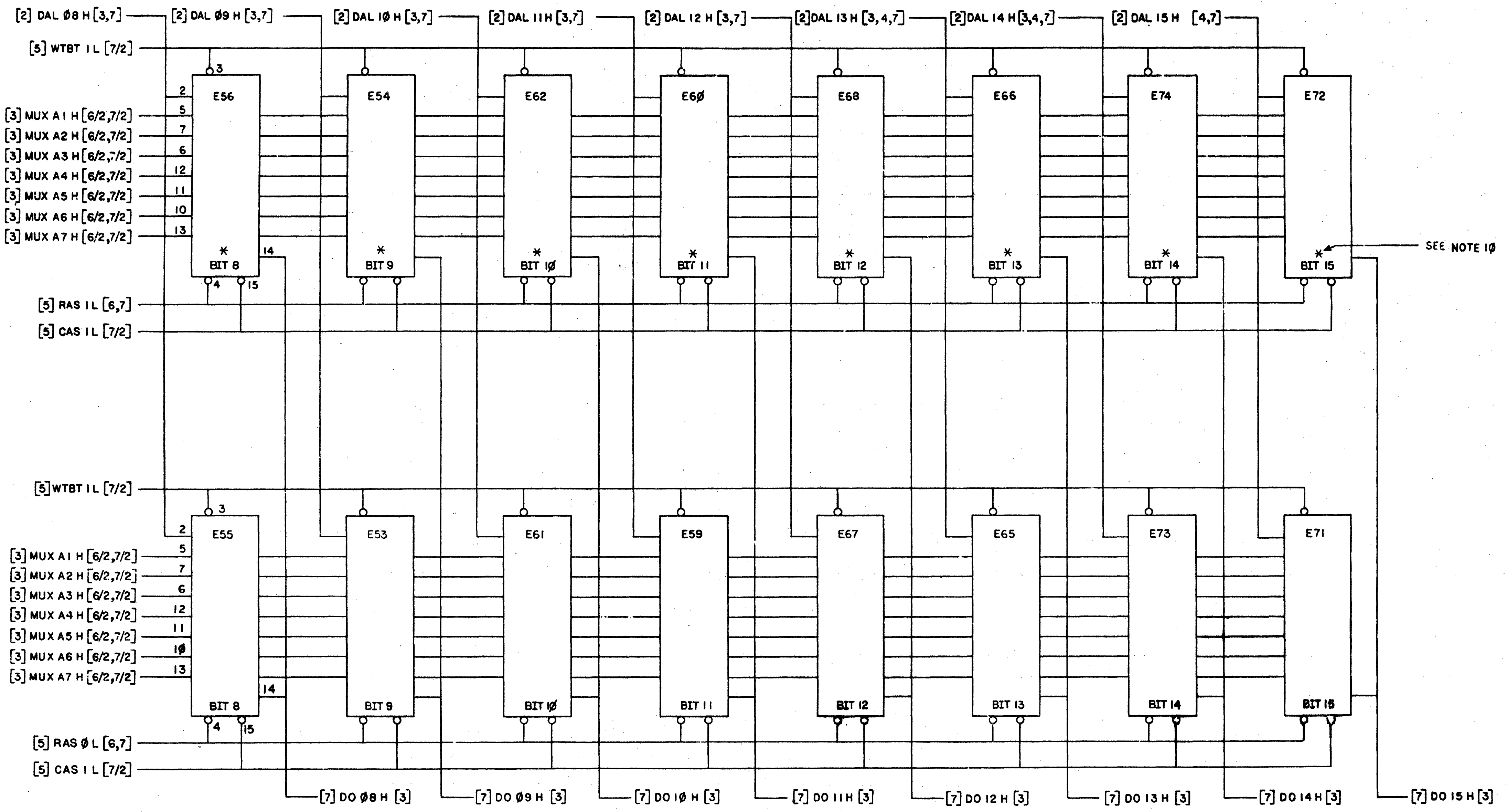
[2] DAL 08 H [3,7]
[2] DAL 09 H [3,7]
[2] DAL 10 H [3,7]
[2] DAL 11 H [3,7]
[2] DAL 12 H [3,7]
[2] DAL 13 H [3,4,7]
[2] DAL 14 H [3,4,7]
[2] DAL 15 H [4,7]
[5] WTBT 1 L [7/2]
[3] MUX A1 H [6/2,7/2]
[3] MUX A2 H [6/2,7/2]
[3] MUX A3 H [6/2,7/2]
[3] MUX A4 H [6/2,7/2]
[3] MUX A5 H [6/2,7/2]
[3] MUX A6 H [6/2,7/2]
[3] MUX A7 H [6/2,7/2]
E56
E54
E62
E60
E68
E66
E74
E72
BIT 8
BIT 9
BIT 10
BIT 11
BIT 12
BIT 13
BIT 14
BIT 15
SEE NOTE 10
[5] RAS 1 L [6,7]
[5] CAS 1 L [7/2]
E55
E53
E61
E59
E67
E65
E73
E71
[5] RAS 0 L [6,7]
[7] DO 08 H [3]
[7] DO 09 H [3]
[7] DO 10 H [3]
[7] DO 11 H [3]
[7] DO 12 H [3]
[7] DO 13 H [3]
[7] DO 14 H [3]
[7] DO 15 H [3]
2
3
4
5
6
7
10
11
12
13
14
15

VCC1 — E26,E27,E32,E33,E38,E39,E43,E44, E55,E56,E61,E62,E67,E68,E73,E74
VCC2 — E24,E25,E30,E31,E36,E37,E41,E42, E53,E54,E59,E60,E65,E66,E71,E72
+5VNCR — E1, E8, E9, E15,E16,E45,E51,E52,E57,E58,E63,E64,E69,E70
+5VCR — E3 THRU E7, E10 THRU E14,E17 THRU E23,E28,E29,E35,E40,E46

REVISIONS		
CHK	CHANGE NO.	REV.

TITLE 32K 16 BIT MOS MEM
SCALE — SHEET 7 OF 7
SIZE D CODE CS NUMBER M8044-0-1 REV. C

ml

10

THIS DRAWING AND SPECIFICATIONS, HEREIN, ARE THE PROPERTY OF DIGITAL EQUIPMENT CORPORATION AND SHALL NOT BE REPRODUCED OR COPIED OR USED IN WHOLE OR IN PART AS THE BASIS FOR THE MANUFACTURE OR SALE OF ITEMS WITHOUT WRITTEN PERMISSION.
COPYRIGHT © [illegible] DIGITAL EQUIPMENT CORPORATION

MODULE VARIATIONS AA&CA

1.

2. W2 THRU W5 SHOULD BE INSTALLED WITH ASSEMBLY SPACERS SO THAT THEY LOOK LIKE THE FOLLOWING:

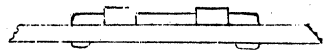

3. R. PACKS SHOULD BE INSTALLED SO THAT LEADS DO NOT INTERFERE WITH OTHER COMPONENTS.

4. ⊗ WIRE WRAP PIN.

5.

MEMORY TYPE	JUMPER CONFIG	VARIATION
NON-PARITY	5-7	AA, CA

6.

MEMORY SIZE	JUMPER CONFIG		VARIATION
4 K	17-15	17-14	AA
16 K	16-15	16-14	CA

7. OPTIONAL JUMPER 1-2 WILL ALLOW USER TO EXTEND USABLE MEMORY SPACE FROM 28K TO 30K. NORMAL JUMPER IS 1-3.

8.

JUMPER	BATTERY BACK-UP	NON BATTERY BACK-UP
W2	OUT	IN
W3	OUT	IN
W4	IN	OUT
W5	IN	OUT

9.

MEMORY SIZE	W1	R3	VARIATION
4K	IN	OUT	AA
16K	OUT	IN	CA

10. THE FOLLOWING IC'S ARE NOT INSTALLED IN AA & CA VARIATIONS: E25, 27, 31, 33, 37, 39, 42, 44, 45, 47, 48, 49, 50, 52, 54, 56, 58, 60, 62, 64, 66, 68, 72 & 74.

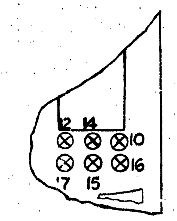
12
14
10
16
7
15

DETAIL A

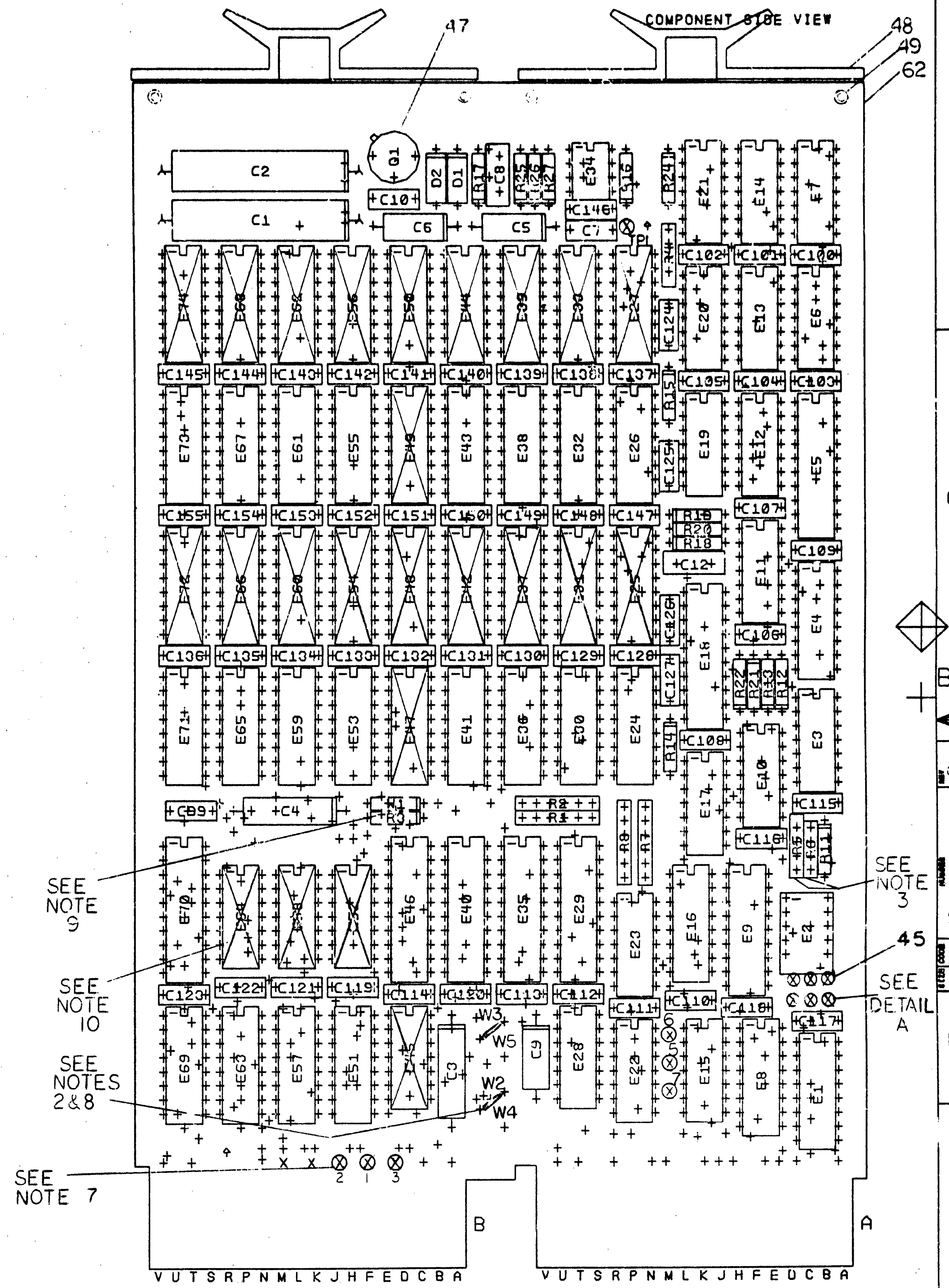
COMPONENT SIDE VIEW
47
48
49
62
C1
C2
Q1
SEE NOTE 9
SEE NOTE 10
SEE NOTES 2&8
SEE NOTE 7
SEE NOTE 3
45
SEE DETAIL A
W2
W3
W4
W5
2
1
3
B
A
V U T S R P N M L K J H F E D C B A
V U T S R P N M L K J H F E D C B A

NOTES:

CHK	CHANGE NO	REV
RR	M8044-00001	C
REVISED & REDRAWN		
STORAGE TITLE		
R. GIVEN		
R.G.		2-78
E.B.	M8044 ML002	D
	13 DEC 78	
R. GIVEN		
R. Given		27-DEC-78

ETCH REV. D-P1
P.C. DESIGN DATA BASE REV. DL & DM

SIGNATURES	DATE
DRN.	
CHK'D.	3-20-78
ENG.	
PROJ. ENG.	
PROD.	

SCALE 2/1
SHT. 1 OF 8
NEXT HIGHER ASSY. B-DD-M8045-0

digital

TITLE
32K 16BIT MOS MEMORY

SIZE	CODE	NUMBER	REV
D	UA	M8044-0-0	D

MS# 231966

11

THIS DRAWING AND SPECIFICATIONS, HEREIN, ARE THE PROPERTY OF DIGITAL EQUIPMENT CORPORATION AND SHALL NOT BE REPRODUCED OR COPIED OR USED IN WHOLE OR IN PART AS THE BASIS FOR THE MANUFACTURE OR SALE OF ITEMS WITHOUT WRITTEN PERMISSION.
COPYRIGHT © DIGITAL EQUIPMENT CORPORATION

MODULE VARIATIONS AA & CA

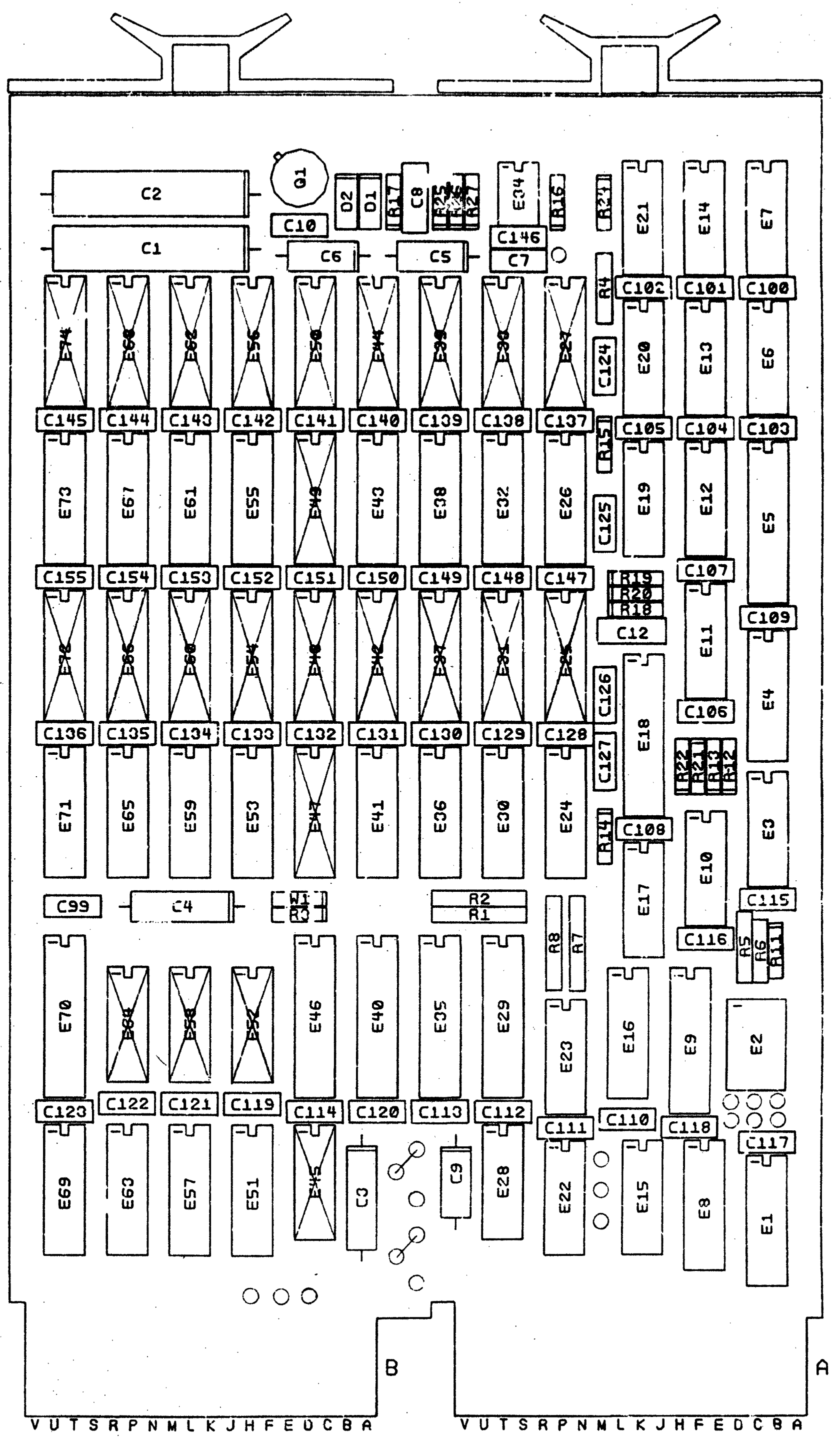
C2
C1
Q1
C10
C6
C5
D2
D1
R17
C8
R25
R26
R27
E34
C146
C7
R16
R21
E21
E14
E7
R4
C102
C101
C100
E74
E68
E62
E56
E50
E44
E39
E33
E27
C124
E20
E13
E6
C145
C144
C143
C142
C141
C140
C139
C138
C137
R15
C105
C104
C103
E73
E67
E61
E55
E49
E43
E38
E32
E26
C125
E19
E12
E5
C155
C154
C153
C152
C151
C150
C149
C148
C147
R19
R20
R18
C107
C12
C109
E72
E66
E60
E54
E48
E42
E37
E31
E25
C126
E18
E11
E4
C106
C136
C135
C134
C133
C132
C131
C130
C129
C128
C127
R22
R23
R13
R12
E71
E65
E59
E53
E47
E41
E36
E30
E24
R14
C108
E17
E10
E3
C115
C99
C4
R3
R2
R1
R8
R7
C116
R5
R6
R11
E70
E64
E58
E52
E46
E40
E35
E29
E23
E16
E9
E2
C123
C122
C121
C119
C114
C120
C113
C112
C111
C110
C118
C117
E69
E63
E57
E51
E45
C3
C9
E28
E22
E15
E8
E1
B
A
V U T S R P N M L K J H F E D C B A
V U T S R P N M L K J H F E D C B A

NOTES:

CHK	CHANGE NO	REV

SIGNATURES	DATE
DRN.	
CHK'D. Ramon V Dhamos	3-20-72
ENG.	
PROJ.ENG.	
PROD.	

digital

TITLE
32K 16 BIT MOS MEMORY

SIZE	CODE	NUMBER	REV
D	UA	M8044-0-0	D

SCALE 2/1
SHT. 2 OF 8
NEXT HIGHER ASSY. B-DD-M8044-0-0

ML 1 MS#261966

MODULE VARIATIONS BA & DA

1.

2. W2 THRU W5 SHOULD BE INSTALLED WITH ASSEMBLY SPACERS SO THAT THEY LOOK LIKE THE FOLLOWING:

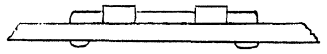

3. R. PACKS SHOULD BE INSTALLED SO THAT LEADS DO NOT INTERFERE WITH OTHER COMPONENTS.

4. ⊗ WIRE WRAP PIN.

5.

MEMORY TYPE	JUMPER CONFIG.	VARIATION
NON-PARITY	5-7	BA, DA

6.

MEMORY SIZE	JUMPER CONFIG.		VARIATION
8 K	17-15	12-14	BA
32 K	16-15	10-14	DA

7. OPTIONAL JUMPER 1-2 WILL ALLOW USER TO EXTEND USABLE MEMORY SPACE FROM 28K TO 30K. NORMAL JUMPER IS 1-3.

8.

JUMPER	BATTERY BACK-UP	NON BATTERY BACK-UP
W2	OUT	IN
W3	OUT	IN
W4	IN	OUT
W5	IN	OUT

9.

MEMORY SIZE	W1	R3	VARIATION
8K	IN	OUT	BA
32K	OUT	IN	DA

10. THE FOLLOWING IC'S ARE NOT INSTALLED IN BA & DA VARIATIONS: E45, 47, 48, 49, 50, 52, 58 & 64.

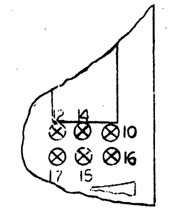
12
14
10
16
17
15

DETAIL A

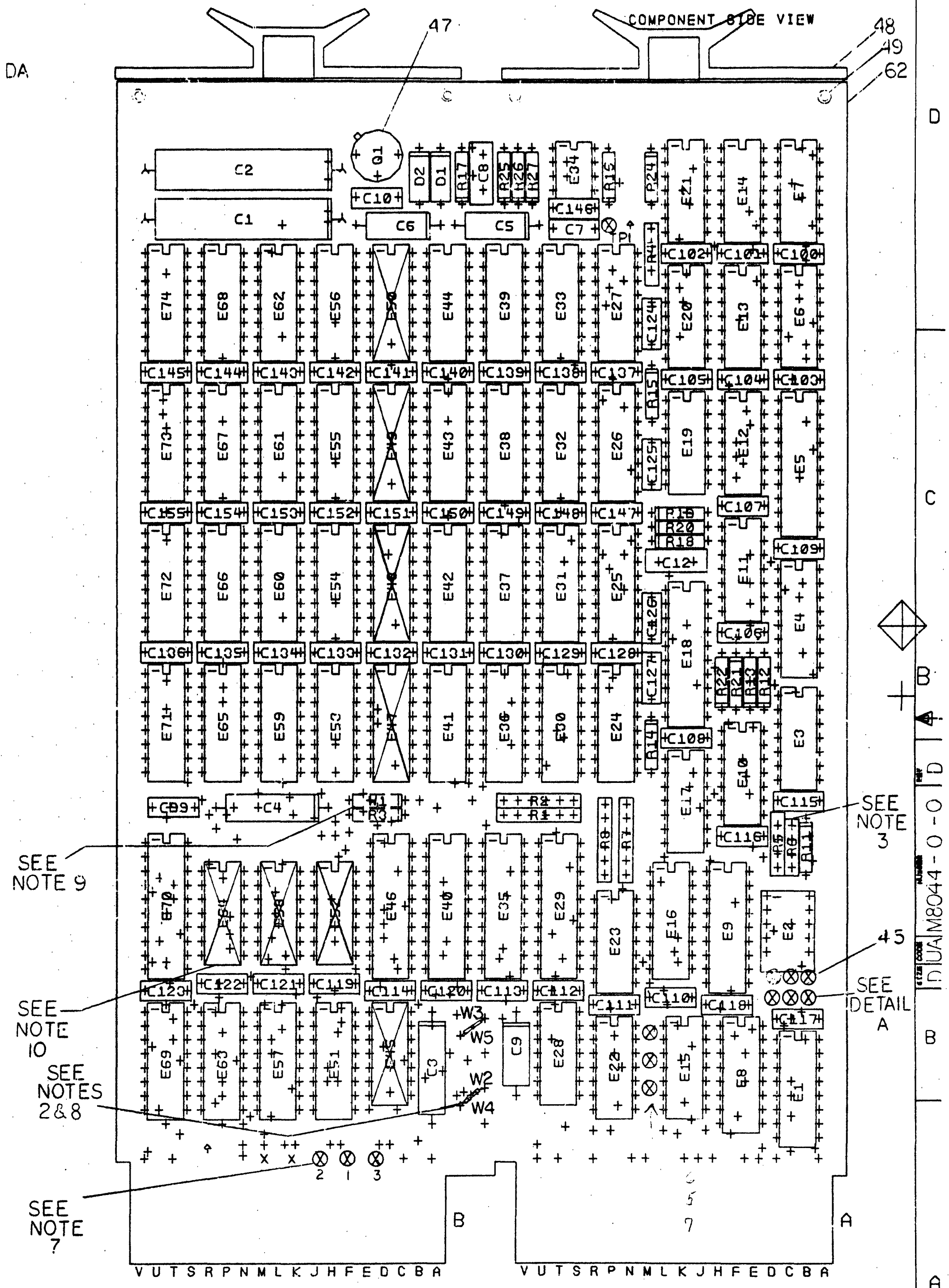
COMPONENT SIDE VIEW
47
48
49
62
Q1
C2
C1
C10
C6
C5
C7
C146
D2
D1
R17
C8
R25
R26
R27
E34
R15
R24
E21
E14
E7
E74
E68
E62
E56
E44
E39
E33
E27
E20
E13
E6
E73
E67
E61
E55
E43
E38
E32
E26
E19
E12
E5
E72
E66
E60
E54
E42
E37
E31
E25
E18
E11
E4
E71
E65
E59
E53
E41
E36
E30
E24
E17
E10
E3
E70
E46
E40
E35
E29
E23
E16
E9
E2
E69
E63
E57
E51
E28
E22
E15
E8
E1
C3
C9
C4
R1
R2
R3
R4
R5
R6
R7
R8
R9
R10
R11
R18
R19
R20
R21
R22
R23
SEE NOTE 9
SEE NOTE 3
45
SEE DETAIL A
SEE NOTE 10
SEE NOTES 2&8
W1
W2
W3
W4
W5
2
1
3
SEE NOTE 7
5
7
B
A
V U T S R P N M L K J H F E D C B A
V U T S R P N M L K J H F E D C B A

NOTES:

CHK	CHANGE NO	REV

ETCH REV.	D-P1
P.C. DESIGN DATA BASE REV.	DL & DM

SIGNATURES		DATE
DRN.		3-6-8
CHK'D.	Richard Y. Moran	3-2
ENG.		
PROJ.ENG.		
PROD.		
SCALE	2/1	
SHT.	3 OF 8	
NEXT HIGHER ASSY.	B-DD-M8044-0	

digital

TITLE
32K 16BIT MOS MEMORY

SIZE	CODE	NUMBER	REV
D	UA	M8044-0-0	D

1 MS# 261966

13

THIS DRAWING AND SPECIFICATIONS, HEREIN, ARE THE PROPERTY OF DIGITAL EQUIPMENT CORPORATION AND SHALL NOT BE REPRODUCED OR COPIED OR USED IN WHOLE OR IN PART AS THE BASIS FOR THE MANUFACTURE OR SALE OF ITEMS WITHOUT WRITTEN PERMISSION.
COPYRIGHT © DIGITAL EQUIPMENT CORPORATION

MODULE VARIATIONS BA & CA

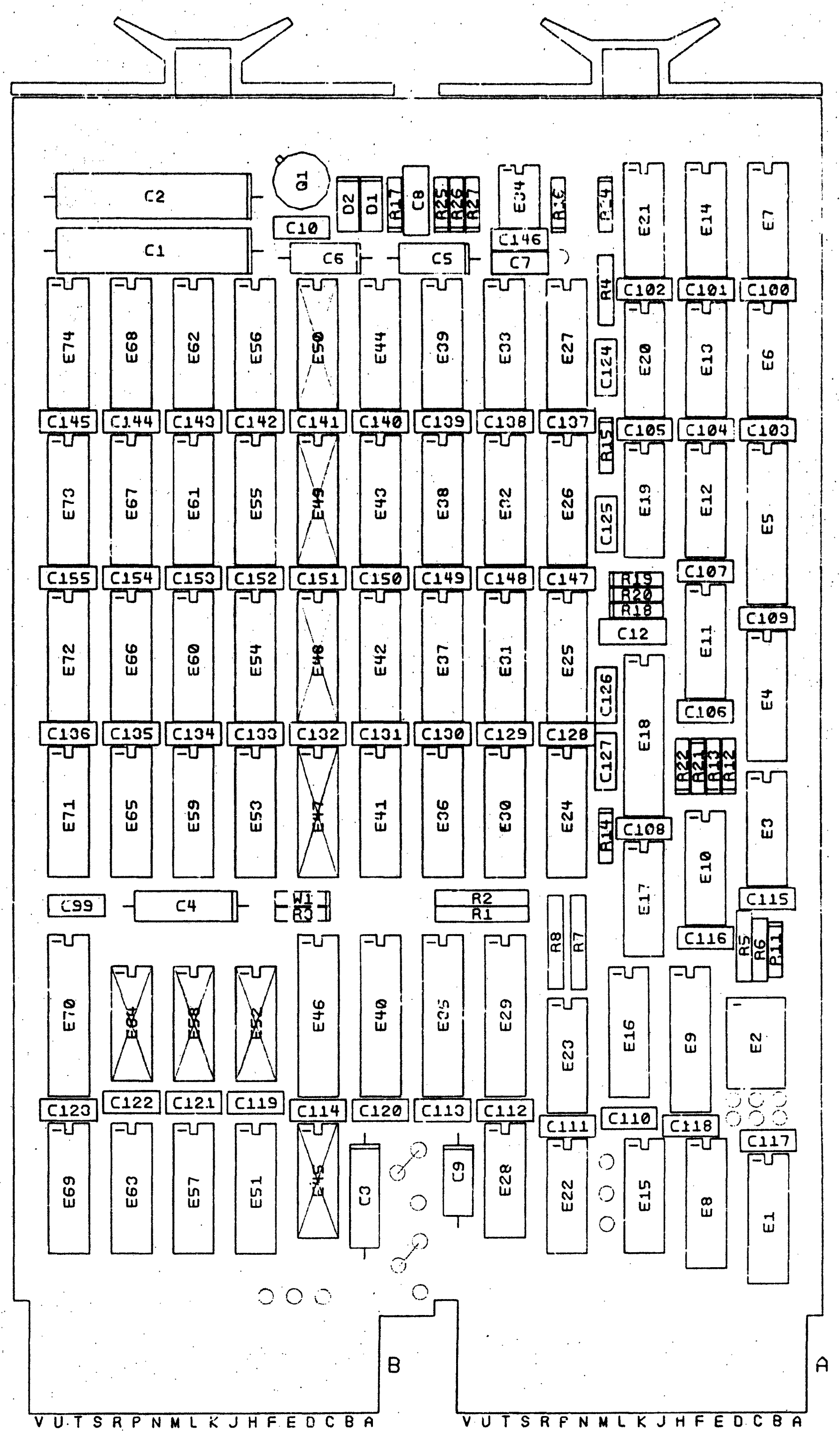
C2
C1
Q1
D2
D1
R17
C8
R25
R26
R27
E34
R16
R24
C10
C146
C6
C5
C7
R4
E21
E14
E7
C102
C101
C100
E74
E68
E62
E56
E50
E44
E39
E33
E27
C124
E20
E13
E6
C145
C144
C143
C142
C141
C140
C139
C138
C137
C105
C104
C103
R15
E73
E67
E61
E55
E49
E43
E38
E32
E26
C125
E19
E12
E5
C155
C154
C153
C152
C151
C150
C149
C148
C147
R19
R20
R18
C107
C12
C109
E72
E66
E60
E54
E48
E42
E37
E31
E25
C126
E18
E11
E4
C106
C136
C135
C134
C133
C132
C131
C130
C129
C128
C127
R22
R21
R13
R12
E71
E65
E59
E53
E47
E41
E36
E30
E24
R14
C108
E10
E3
C99
C4
W1
R3
R2
R1
R8
R7
E17
C115
C116
R5
R6
R11
E70
E64
E58
E52
E46
E40
E35
E29
E23
E16
E9
E2
C123
C122
C121
C119
C114
C120
C113
C112
C111
C110
C118
C117
E69
E63
E57
E51
E45
C3
C9
E28
E22
E15
E8
E1
B
A
V U T S R P N M L K J H F E D C B A
V U T S R P N M L K J H F E D C B A

NOTES:

REV	NO	CHANGE	CHK

SIGNATURES	DATE	digital
DRN.		
CHK'D. Richard V Ohamers	3-20-75	TITLE 32K 16 BIT MOS MEMORY
ENG.		
PROJ.ENG.		
PROD.		

SCALE 2/1	SIZE D	CODE JA	NUMBER M8044-0-0	REV D
SHT. 4 OF 8				
NEXT HIGHER ASSY. B-DD M8044-0-0				

mL 1 MS# 21966

M8045 5013128D-P1 1:1

M8045 5013128D P1 1:1

LAYER 1

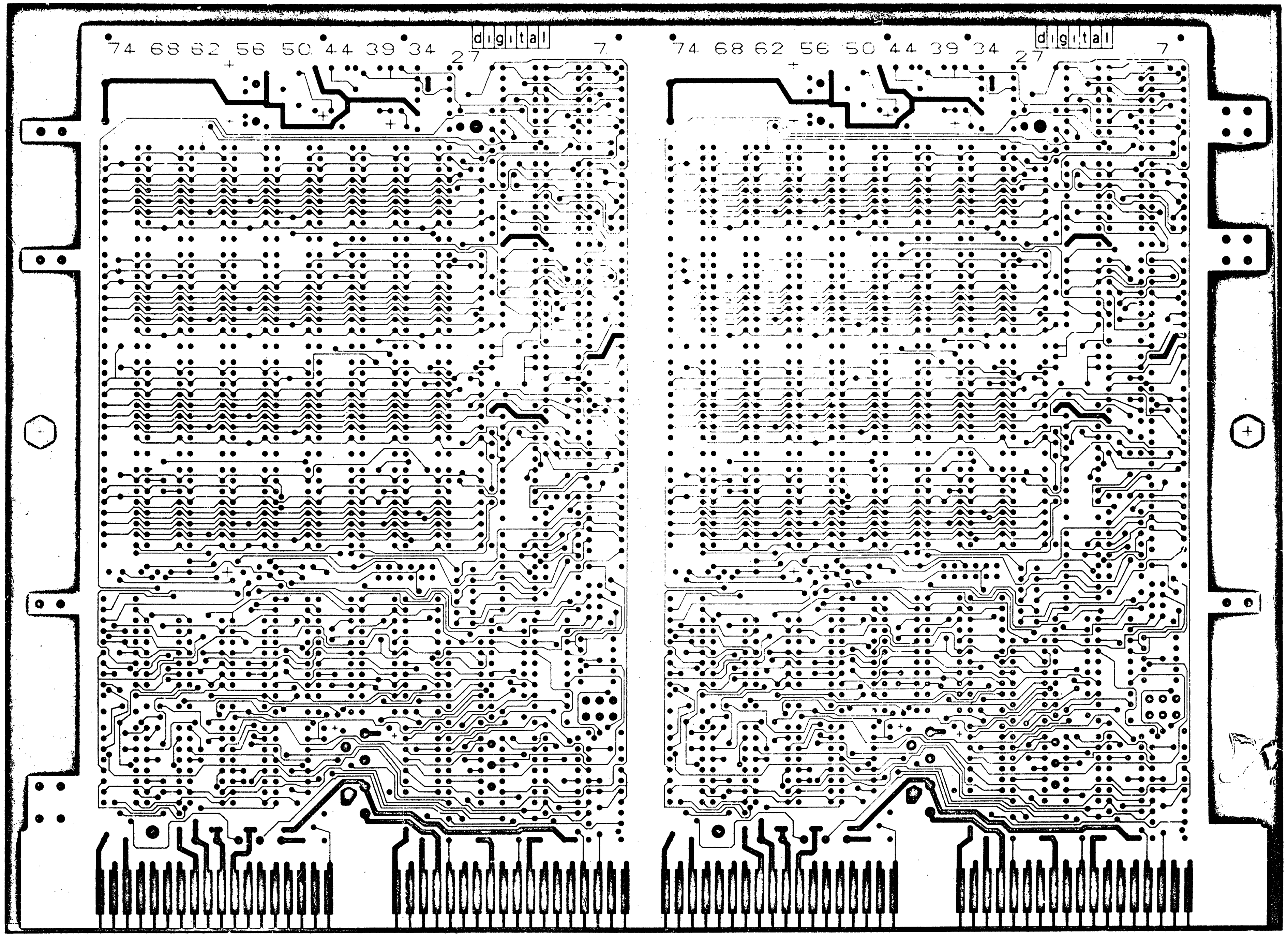

74 68 62 56 50 44 39 34 27 7
digital
74 68 62 56 50 44 39 34 27 7
digital

TITLE	SIZE	CODE	NUMBER	REV.
32K 16BIT MOS MEMORY	D	UA	M8044-0-0	D
SCALE 2/1 SHEET 5 OF 8	DIST			

D UA M8044-0-2 D

15

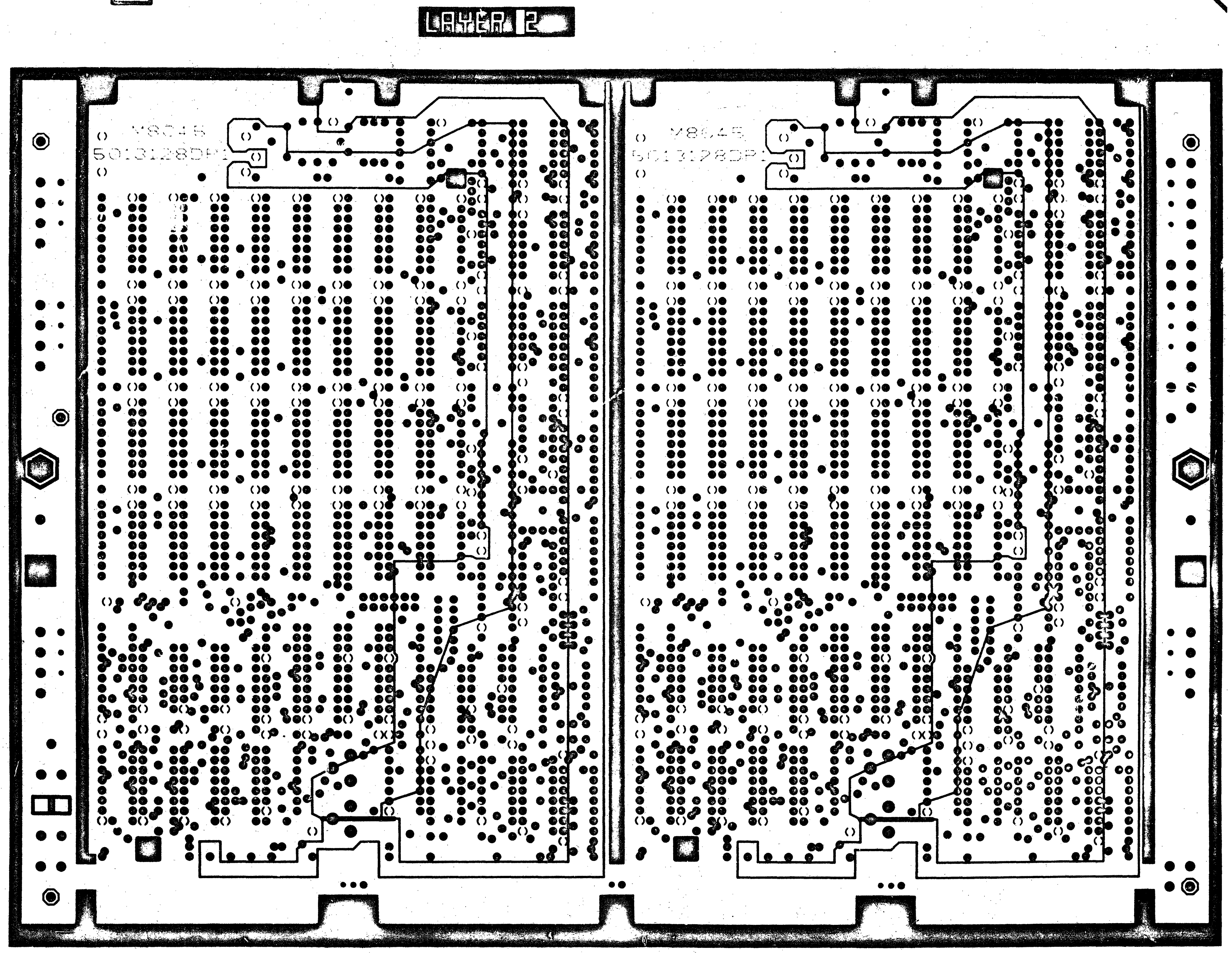
LAYER 2
M8045
5013128DP1
M8045
5013128DP1

TITLE 32K 16BIT MOS MEMORY	SIZE D	CODE UA	NUMBER M8044-0-0	REV. D
SCALE 2/1	SHEET 6 OF 8	DIST		

ML

16

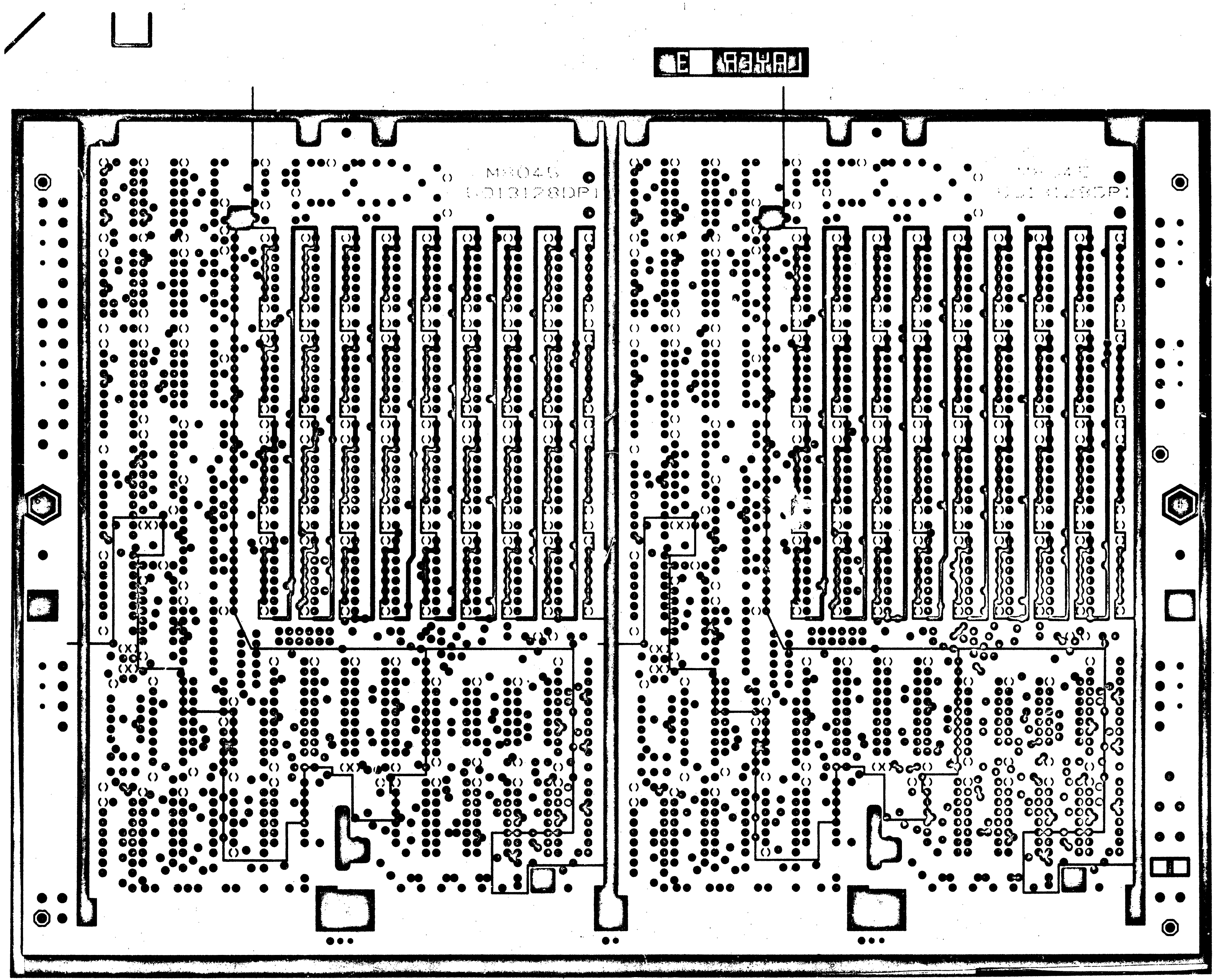

M8045
5013128DP1

TITLE	SIZE	CODE	NUMBER	REV
32K 16BIT MOS MEMORY	D	UA	MS044-0-0	D
SCALE 2/1	SHEET 7 OF 8			

D UA MS044-0-0 D

ml.

17

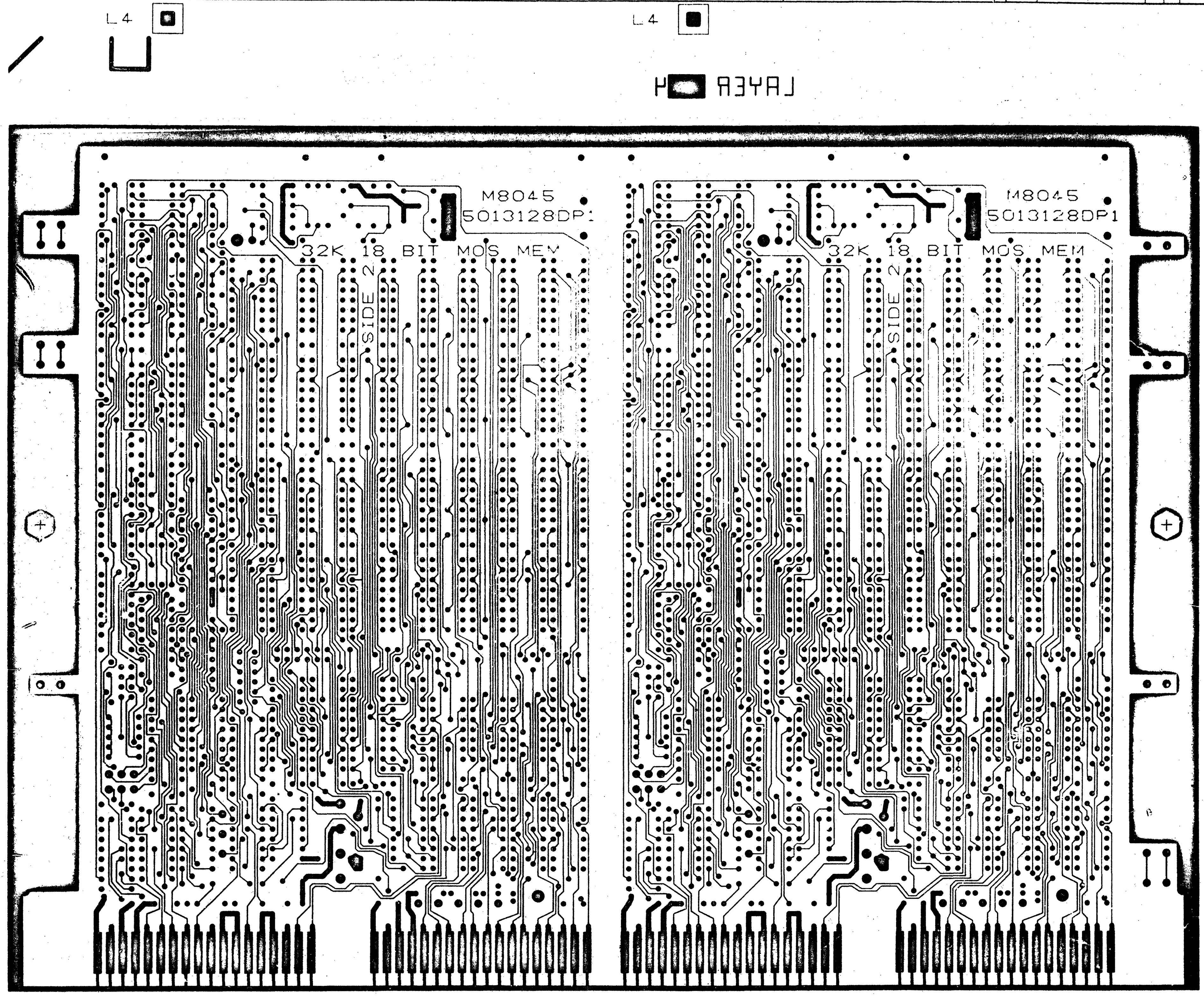
L4
L4
LAYER 4
M8045
5013128DP1
32K 18 BIT MOS MEM
SIDE 2
M8045
5013128DP1
32K 18 BIT MOS MEM
SIDE 2

TITLE	SIZE	CODE	NUMBER	REV.
32K 16BIT MOS MEMORY	D	UA	M8044-0-0	D
SCALE 2/1	SHEET 8 OF 8	DIST		

DIGITAL EQUIPMENT CORPORATION
MAYNARD, MASSACHUSETTS
PARTS LIST

MADE BY M. MICHAUD	CHECKED D. HEALY	SECTION 1
DATE 11 AUG 77	DATE 11 AUG 77	
ENG M D Michaud	PROD	ISSUED SECT. 1
DATE	DATE 8-19-22	

ITEM NO.	DWG NO./PART NO.	DESCRIPTION	QUANTITY VARIATION DLV11-F	DLV11-FA	DLV11-FB
1	D-UA-M8028-0-0	DLV11-F ASYN LINE INTERFACE, M8028	1	1	1
2	A-SP-3700297-40	PACKAGING INSTRUCTIONS	1	1	1
3	B-UA-BC05M-04	CABLE ASSEMBLY, BC05M-04	-	1	-
4	D-UA-BC03L-05	CABLE ASSEMBLY, BC03L-05	-	-	1

TITLE ASYN LINE INTERFACE (DLV11-F)	ASSY NO. NONE	SIZE A	CODE PL	NUMBER DLV11-F-0	REV A	ECO NO. DLV11F-00001
	SHEET 1 OF 1	DIST				

DEC FORM
DRA 110

BAUD RATE SELECT JUMPERS

RECEIVER	(R3)	(R2)	(R1)	(R0)	BAUD	
TRANSMITTER	(T3)	(T2)	(T1)	(T0)	RATE	
	I	I	I	I	50	
	I	I	I	R	75	
	I	I	R	I	110	✱RECEIVER
	I	I	R	R	134.5	
	I	R	I	I	150	
	I	R	I	R	300	
	I	R	R	I	600	
	I	R	R	R	1200	
	R	I	I	I	1800	
	R	I	I	R	2000	
	R	I	R	I	2400	
	R	I	R	R	3600	
	R	R	I	I	4800	
	R	R	I	R	7200	
	R	R	R	I	9600	✱TRANSMITTER
	R	R	R	R	19200	

I; INSTALLED   R; REMOVED

SEE NOTE 2

DEVICE ADDRESS JUMPERS

JUMPERS IN	JUMPERS OUT	ADDRESS	
A4, A5, A6, A8 A9, A10, A11, A12	A3, A7	CONSOLE ADDRESS 17756X	*
A3, A7, A8 A9, A11, A12	A4, A5, A6 A10	DLV11-F UNIT #1 17561X	

ADDRESS SETUP DIAGRAM ← SEE NOTE #3

15	14	13	12	11	10	9	8	7	6	5	4	3	2	1	0
▨	▨	▨										▨	▨	▨	▨
▨	▨	▨										▨	▨	▨	▨
▨	▨	▨										▨	▨	▨	▨
▨	▨	▨										▨	▨	▨	▨

SEE NOTE 2

VECTOR ADDRESS JUMPERS

JUMPERS IN	JUMPERS OUT	ADDRESS	
V4, V5	V3, V6, V7 V8	CONSOLE 60, 64	*
V6, V7	V3, V4, V5 V8	DLV11-F UNIT #1 300, 304	

VECTOR SETUP DIAGRAM ← SEE NOTE #3

15	14	13	12	11	10	9	8	7	6	5	4	3	2	1	0
▨	▨	▨	▨	▨	▨	▨							▨	▨	▨
▨	▨	▨	▨	▨	▨	▨							▨	▨	▨
▨	▨	▨	▨	▨	▨	▨							▨	▨	▨
▨	▨	▨	▨	▨	▨	▨							▨	▨	▨

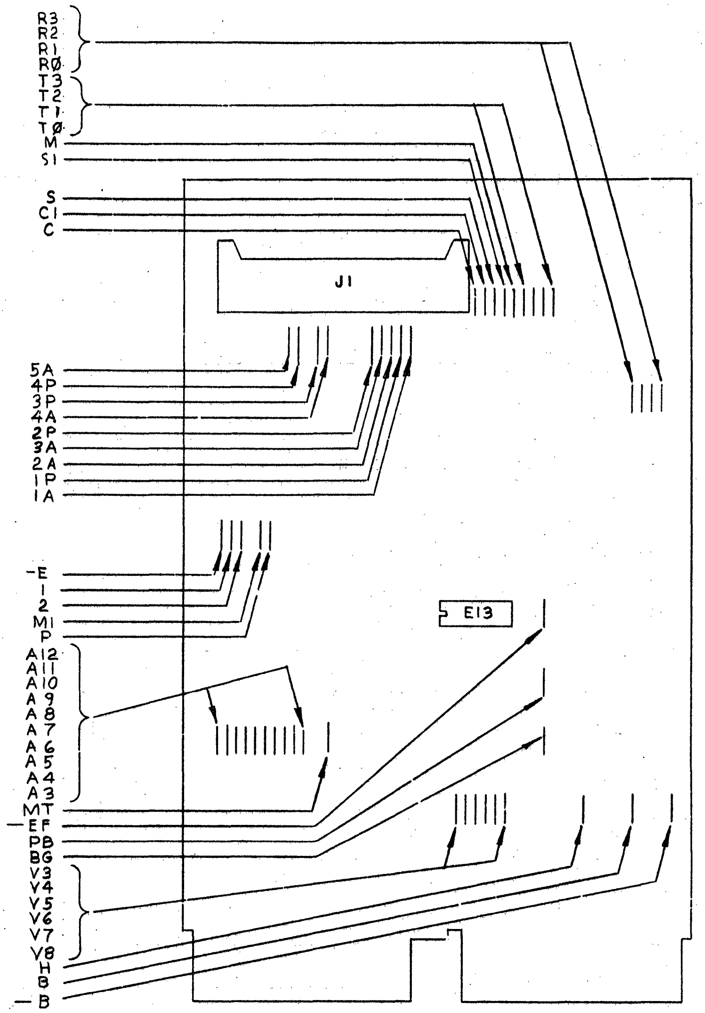

MISCELLANEOUS JUMPERS

JUMPERS IN	JUMPERS OUT	FEATURE	
1.2	▨	5 DATA BITS	
1	2	6 DATA BITS	
2	1	7 DATA BITS	
▨	1.2	8 DATA BITS	✱
P	▨	PARITY CHECK	
▨	P	NO PARITY CHECK	✱
-E	▨	ODD PARITY	
▨	-E	EVEN PARITY	✱
PB	▨	PROG. BAUD RATES ENAB	
▨	PB	PROG. BAUD RATES DISAB	✱
BG	▨	BREAK GENERATION ENAB	✱
▨	BG	BREAK GENERATION DISAB	
C, C1	S, S1	COMMON SPEED	✱
S, S1	C, C1	SPLIT SPEED	
H	▨	HALT ON FRAMING ERROR	✱
▨	H	NO HALT ON FRAMING ERROR	
B	-B	BOOT ON FRAMING ERROR	
-B	B	NO BOOT ON FRAMING ERROR	✱
-EF	▨	ERROR FLAGS DISABLED	✱
▨	EF	ERROR FLAGS ENABLED	
1A, 2A, 3A	1P, 2P	ACTIVE RECIEVE 20 MA CURRENT LOOP	✱
1P, 2P	1A, 2A, 3A	PASSIVE RECIEVE 20 MA CURRENT LOOP	
4A, 5A	3P, 4P	ACTIVE TRANSMIT 20 MA CURRENT LOOP	✱
3P, 4P	4A, 5A	PASSIVE TRANSMIT 20 MA CURRENT LOOP	
▨	M, M1	FACTORY USE ONLY	✱
MT	▨	MAINTENANCE BIT ENABLED	
▨	MT	MAINTENANCE BIT DISABLED	✱

NOTES:

1. ✱ MODULE SHIPPED FROM FACTORY IN THIS CONFIGURATION.
2. CONFIGURATIONS SHOWN FOR DEVICE AND VECTOR ADDRESSES ARE ONLY A FEW EXAMPLES. FOR A COMPLETE LIST SEE DLV11-E/DLV11-F USERS MANUAL.
3. ADDRESS SETUP DIAGRAMS PROVIDED FOR USERS CONVENIANCE.

REVISIONS

CHK	CHANGE NO.	REV.
JA	M8028-00001	B
	Brusse 7 APR '78	
	M. MICHAUD	
	M. Michaud 11 APR '78	
BHF	M8028-00002	C
	D. Zurcher 08 Jun 78	
	J. CURTIS	
	E.A. Curtis 13 July 78	

MAKEPEACE P-1655

DEC FORM NO.
DRD 102-D

DRN. Blodgett	25 July 77
CHK'D F. Smart	8-3-77
ENG. M Michaud	8-31-77
PROJ. ENG. M Michaud	8-31-77
PROD.	9/13/77
NEXT HIGHER ASSY.	
SCALE	
SHEET 1 OF 6	

FIRST USED ON

digital

TITLE ASYN LINE INTERFACE

SIZE	CODE	NUMBER	REV.
D	CS	M8028-0-1	C

DIST.

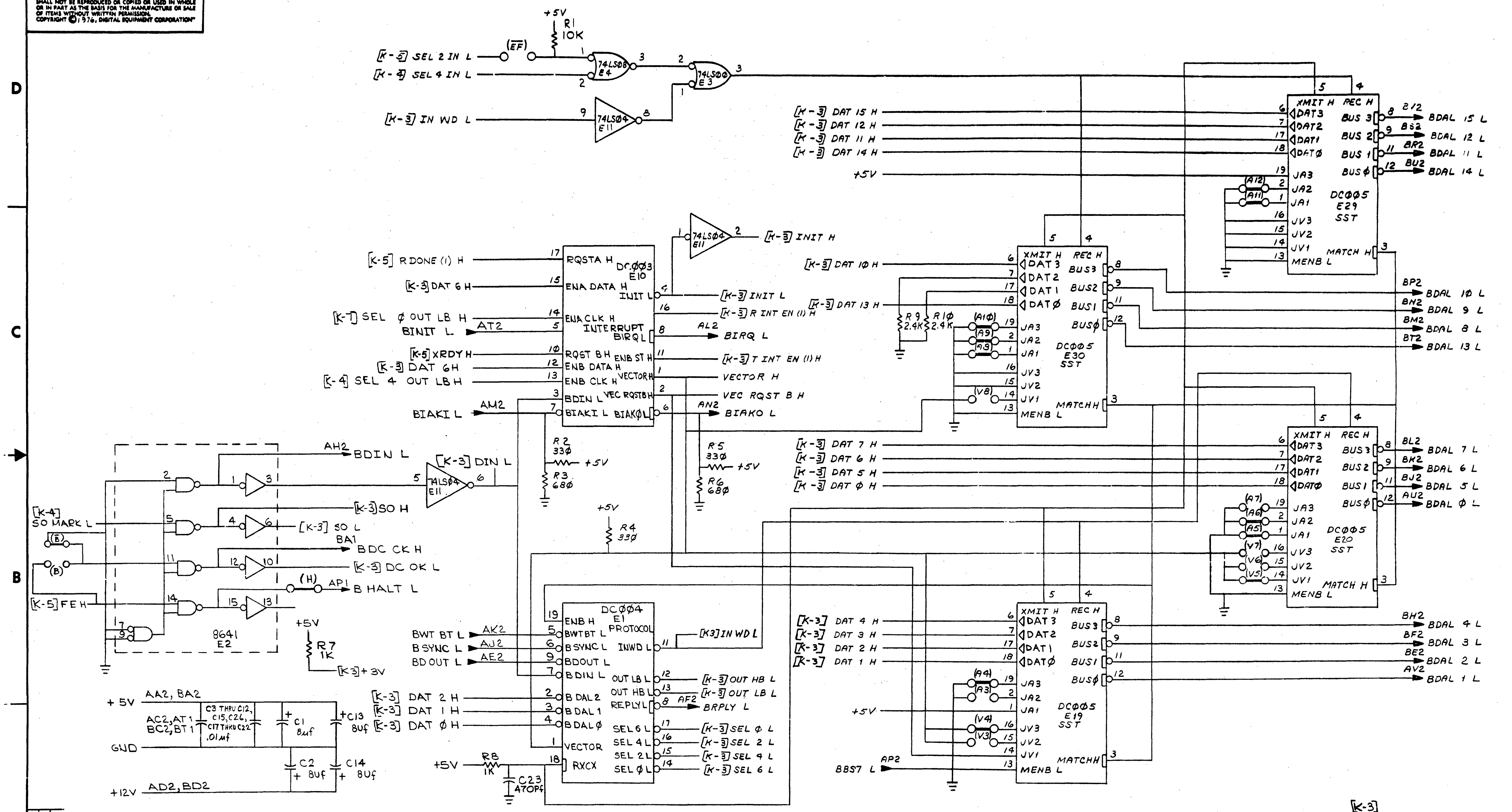
+5V
R1 10K
(EF)
[K-5] SEL 2 IN L
[K-4] SEL 4 IN L
[K-3] IN WD L
74LS08 E4
74LS00 E3
74LS04 E11
[K-3] DAT 15 H
[K-3] DAT 12 H
[K-3] DAT 11 H
[K-3] DAT 14 H
XMIT H
REC H
DAT3
DAT2
DAT1
DATØ
BUS 3
BUS 2
BUS 1
BUSØ
JA3
JA2
JA1
JV3
JV2
JV1
MENB L
MATCH H
DCØØ5 E29 SST
2/2 BDAL 15 L
BS2 BDAL 12 L
BR2 BDAL 11 L
BU2 BDAL 14 L
[K-3] INIT H
[K-5] RDONE (1) H
[K-3] DAT 6 H
[K-1] SEL Ø OUT LB H
BINIT L
AT2
[K-5] XRDY H
[K-3] DAT 6H
[K-4] SEL 4 OUT LB H
BIAKI L
AM2
RQSTA H
DCØØ3 E10
ENA DATA H
INIT L
ENA CLK H
INTERRUPT
BIRQ L
RQST BH
ENB ST H
ENB DATA H
VECTOR H
ENB CLK H
BDIN L
VEC RQST BH
BIAKI L
BIAKØ L
[K-3] INIT L
[K-3] R INT EN (1) H
AL2 BIRQ L
[K-3] T INT EN (1) H
VECTOR H
VEC RQST B H
AN2 BIAKO L
[K-3] DAT 1Ø H
[K-3] DAT 13 H
R9 2.4K
R1Ø 2.4K
DCØØ5 E30 SST
BP2 BDAL 1Ø L
BN2 BDAL 9 L
BM2 BDAL 8 L
BT2 BDAL 13 L
R2 33Ø
R3 68Ø
R5 33Ø
R6 68Ø
R4 33Ø
[K-3] DAT 7 H
[K-3] DAT 6 H
[K-3] DAT 5 H
[K-3] DAT Ø H
DCØØ5 E20 SST
BL2 BDAL 7 L
BK2 BDAL 6 L
BJ2 BDAL 5 L
AU2 BDAL Ø L
AH2 BDIN L
[K-3] DIN L
[K-4] SO MARK L
[K-3] SO H
[K-3] SO L
BA1 BDC CK H
[K-3] DC OK L
(H) AP1 B HALT L
[K-5] FE H
8641 E2
R7 1K
[K-3] +3V
DCØØ4 E1 PROTOCOL
ENB H
BWTBT L
BSYNC L
BDOUT L
BDIN L
BDAL2
BDAL1
BDALØ
VECTOR
RXCX
IN WD L
OUT LB L
OUT HB L
REPLY L
SEL 6 L
SEL 4 L
SEL 2 L
SEL Ø L
[K3] IN WD L
BWT BT L AK2
B SYNC L AJ2
BD OUT L AE2
[K-3] OUT HB L
[K-3] OUT LB L
AF2 BRPLY L
[K-3] SEL Ø L
[K-3] SEL 2 L
[K-3] SEL 4 L
[K-3] SEL 6 L
[K-3] DAT 2 H
[K-3] DAT 1 H
[K-3] DAT Ø H
R8 1K
C23 470PF
+5V AA2, BA2
AC2, AT1, BC2, BT1
C3 THRU C12, C15, C26, C17 THRU C22 .01uf
C1 8uf
C13 8uf
C2 8uf
C14 8uf
GND
+12V AD2, BD2
[K-3] DAT 4 H
[K-3] DAT 3 H
[K-3] DAT 2 H
[K-3] DAT 1 H
BBS7 L AP2
DCØØ5 E19 SST
BH2 BDAL 4 L
BF2 BDAL 3 L
BE2 BDAL 2 L
AV2 BDAL 1 L

DRN.		FIRST USED ON [K-3]	digital
CHK'D			
ENG.		TITLE	
PROJ. ENG.		ASYNC LINE INTERFACE (BUS RECEIVERS & DRIVERS)	
PROD.			
NEXT HIGHER ASSY.			
SCALE	—	SIZE D CODE CS NUMBER M8Ø28-Ø-1	REV. C
SHEET	2 OF 6	DIST.	

D CS M8028-Ø-1 REV. C

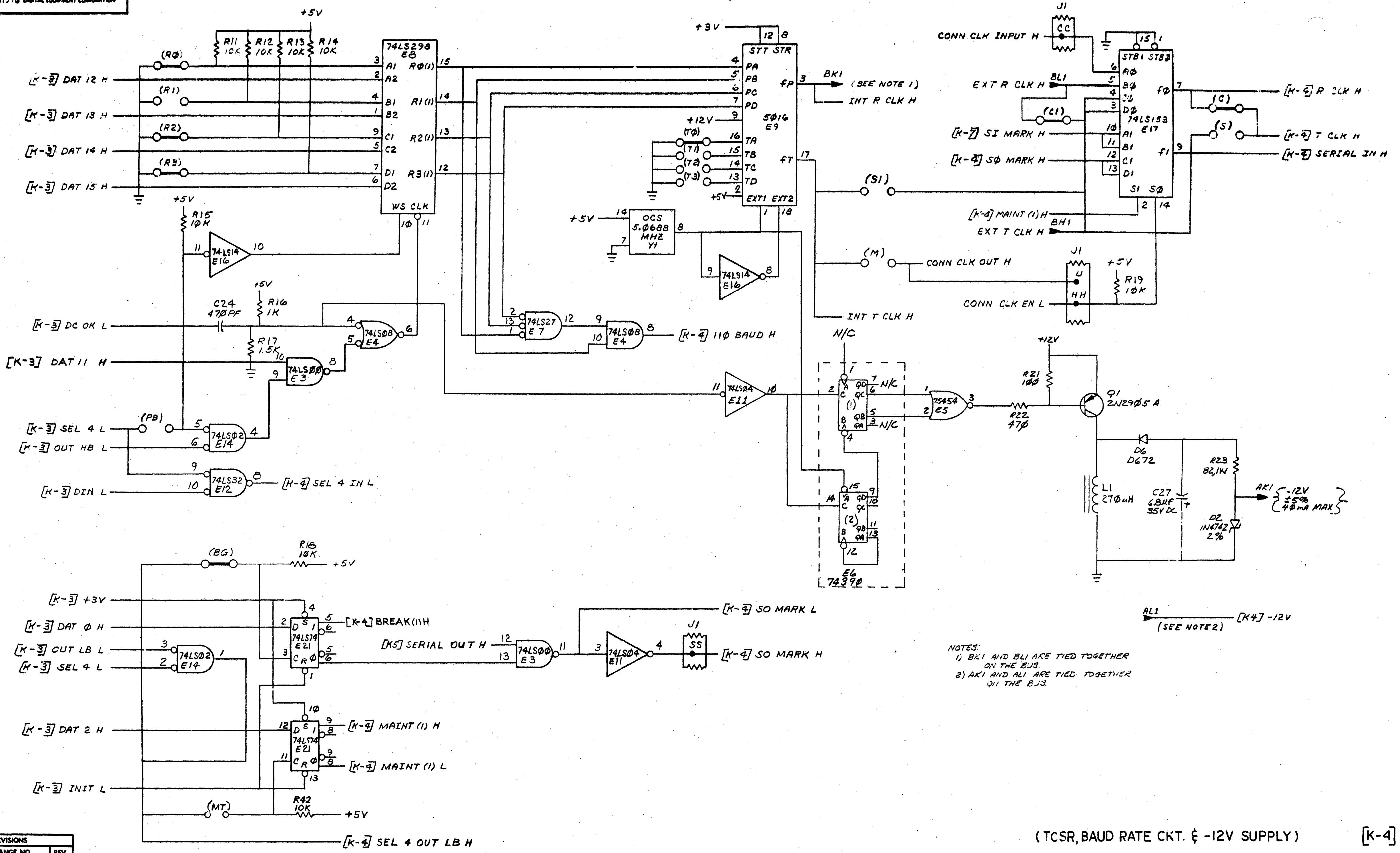
+5V
R11 10K
R12 10K
R13 10K
R14 10K
(R0)
(R1)
(R2)
(R3)
[K-3] DAT 12 H
[K-3] DAT 13 H
[K-3] DAT 14 H
[K-3] DAT 15 H
74LS298
E8
A1
A2
B1
B2
C1
C2
D1
D2
R0(1)
R1(1)
R2(1)
R3(1)
WS CLK
+5V
R15 10K
74LS14
E16
+3V
STT STR
PA
PB
PC
PD
5016
E9
fP
fT
TA
TB
TC
TD
EXT1 EXT2
+12V
(T0)
(T1)
(T2)
(T3)
+5V
OCS 5.0688 MHZ Y1
74LS14
E16
BK1
(SEE NOTE 1)
INT R CLK H
(S1)
(M)
CONN CLK OUT H
INT T CLK H
CONN CLK INPUT H
J1
CC
EXT R CLK H
BL1
(C1)
[K-7] SI MARK H
[K-4] S0 MARK H
[K-4] MAINT (1) H
EXT T CLK H
BH1
STB1 STB0
A0
B0
C0
D0
74LS153
E17
A1
B1
C1
D1
f0
f1
S1 S0
(C)
(S)
[K-4] R CLK H
[K-4] T CLK H
[K-4] SERIAL IN H
J1
U
HH
+5V
R19 10K
CONN CLK EN L
[K-3] DC OK L
C24 470PF
+5V
R16 1K
R17 1.5K
[K-3] DAT 11 H
74LS08
E4
74LS00
E3
74LS27
E7
74LS08
E4
[K-4] 110 BAUD H
N/C
74LS04
E11
E6
74390
(1)
(2)
N/C
N/C
75454
E5
+12V
R21 100
R22 470
Q1
2N2905A
D6
D672
L1
270uH
C27
6.8uF
35V DC
R23
82,1W
D2
1N4742
2%
AK1
-12V ±5% 40mA MAX
(PB)
[K-3] SEL 4 L
[K-3] OUT HB L
74LS02
E14
[K-3] DIN L
74LS32
E12
[K-4] SEL 4 IN L
(BG)
R18 10K
+5V
[K-3] +3V
[K-3] DAT 0 H
[K-3] OUT LB L
[K-3] SEL 4 L
74LS02
E14
74LS74
E21
[K-4] BREAK(1)H
[K5] SERIAL OUT H
74LS00
E3
74LS04
E11
J1
SS
[K-4] SO MARK L
[K-4] SO MARK H
[K-3] DAT 2 H
74LS74
E21
[K-4] MAINT (1) H
[K-4] MAINT (1) L
[K-3] INIT L
(MT)
R42 10K
+5V
[K-4] SEL 4 OUT LB H
AL1
(SEE NOTE 2)
[K4] -12V

NOTES:
1) BK1 AND BL1 ARE TIED TOGETHER ON THE BUS.
2) AK1 AND AL1 ARE TIED TOGETHER ON THE BUS.

(TCSR, BAUD RATE CKT. & -12V SUPPLY)

[K-4]

REVISIONS		
CHK	CHANGE NO.	REV.

TITLE
ASYN LINE INTERFACE
SIZE D
CODE CS
NUMBER M8028-0-1
REV. C
SCALE —//—
SHEET 3 OF 6
DIST.

22

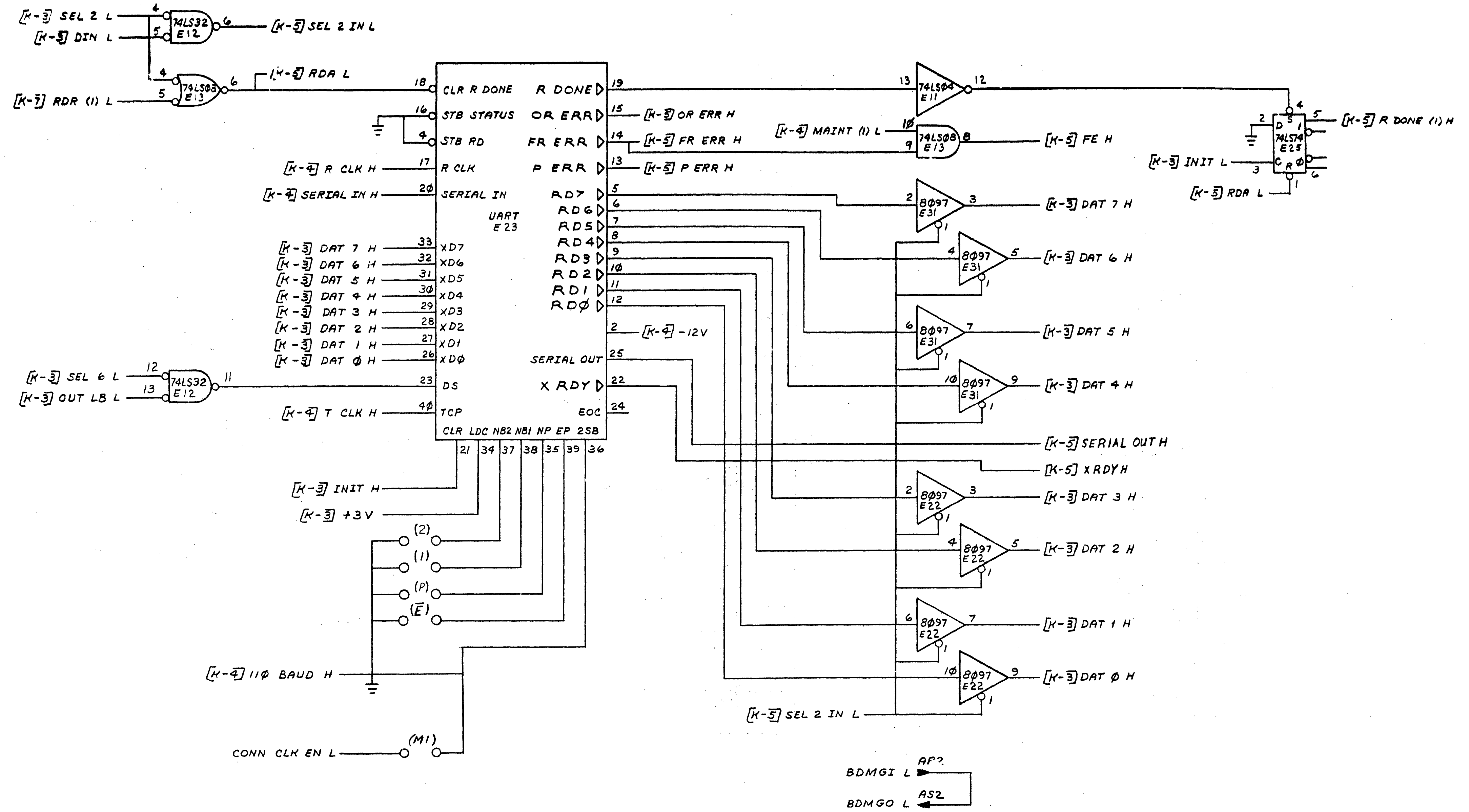
[K-3] SEL 2 L
[K-3] DIN L
74LS32 E12
[K-5] SEL 2 IN L
74LS08 E13
[K-5] RDA L
[K-7] RDR (1) L
CLR R DONE
STB STATUS
STB RD
R CLK
SERIAL IN
UART E23
XD7
XD6
XD5
XD4
XD3
XD2
XD1
XD0
DS
TCP
CLR LDC NB2 NB1 NP EP 2SB
R DONE
OR ERR
FR ERR
P ERR
RD7
RD6
RD5
RD4
RD3
RD2
RD1
RD0
SERIAL OUT
X RDY
EOC
[K-4] R CLK H
[K-4] SERIAL IN H
[K-3] DAT 7 H
[K-3] DAT 6 H
[K-3] DAT 5 H
[K-3] DAT 4 H
[K-3] DAT 3 H
[K-3] DAT 2 H
[K-3] DAT 1 H
[K-3] DAT 0 H
[K-3] SEL 6 L
[K-3] OUT LB L
74LS32 E12
[K-4] T CLK H
[K-3] INIT H
[K-3] +3V
(2)
(1)
(P)
(E)
[K-4] 110 BAUD H
CONN CLK EN L
(M1)
[K-5] OR ERR H
[K-5] FR ERR H
[K-5] P ERR H
[K-4] -12V
74LS04 E11
[K-4] MAINT (1) L
74LS08 E13
[K-5] FE H
8097 E31
8097 E22
[K-5] SERIAL OUT H
[K-5] XRDY H
[K-5] SEL 2 IN L
74LS74 E25
[K-5] R DONE (1) H
[K-3] INIT L
[K-5] RDA L
BDMGI L
AF2
BDMGO L
AS2

(UART CKT)

[K-5]

REVISIONS		
CHK	CHANGE NO.	REV.

TITLE ASYN LINE INTERFACE
SIZE D
CODE CS
NUMBER M8028-0-1
REV. C
SCALE —//—
SHEET 4 OF 6
DIST.

ml

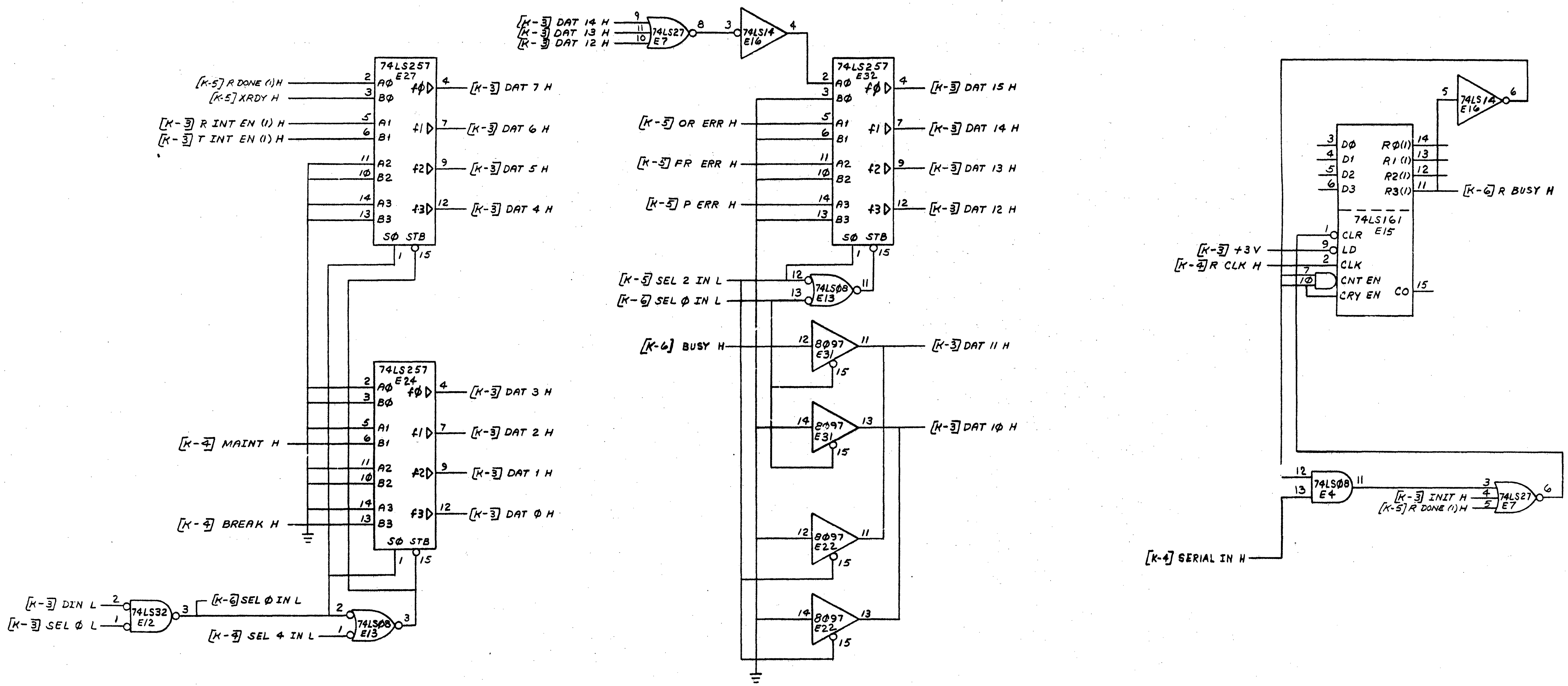

[K-3] DAT 14 H
[K-3] DAT 13 H
[K-3] DAT 12 H
74LS27 E7
74LS14 E16
74LS257 E27
[K-5] R DONE (1) H
[K-5] XRDY H
[K-3] R INT EN (1) H
[K-3] T INT EN (1) H
A0 B0 A1 B1 A2 B2 A3 B3 S0 STB
f0 f1 f2 f3
[K-3] DAT 7 H
[K-3] DAT 6 H
[K-3] DAT 5 H
[K-3] DAT 4 H
74LS257 E32
[K-5] OR ERR H
[K-5] FR ERR H
[K-5] P ERR H
[K-3] DAT 15 H
[K-3] DAT 14 H
[K-3] DAT 13 H
[K-3] DAT 12 H
[K-5] SEL 2 IN L
[K-6] SEL 0 IN L
74LS08 E13
[K-6] BUSY H
8097 E31
[K-3] DAT 11 H
[K-3] DAT 10 H
8097 E22
74LS257 E24
[K-4] MAINT H
[K-4] BREAK H
[K-3] DAT 3 H
[K-3] DAT 2 H
[K-3] DAT 1 H
[K-3] DAT 0 H
[K-3] DIN L
[K-3] SEL 0 L
74LS32 E12
[K-6] SEL 0 IN L
[K-4] SEL 4 IN L
74LS08 E13
74LS14 E16
D0 D1 D2 D3
R0(1) R1(1) R2(1) R3(1)
74LS161 E15
CLR LD CLK CNT EN CRY EN CO
[K-6] R BUSY H
[K-3] +3V
[K-4] R CLK H
74LS08 E4
[K-3] INIT H
[K-5] R DONE (1) H
74LS27 E7
[K-4] SERIAL IN H

(INTERNAL BUS DRIVERS & RCVR BUSY CKT) [K-6]

TITLE	SIZE	CODE	NUMBER	REV.
ASYN LINE INTERFACE	D	CS	M8028-0-1	C
SCALE —	SHEET 5 OF 6	DIST.		

CHK	CHANGE NO.	REV.

24

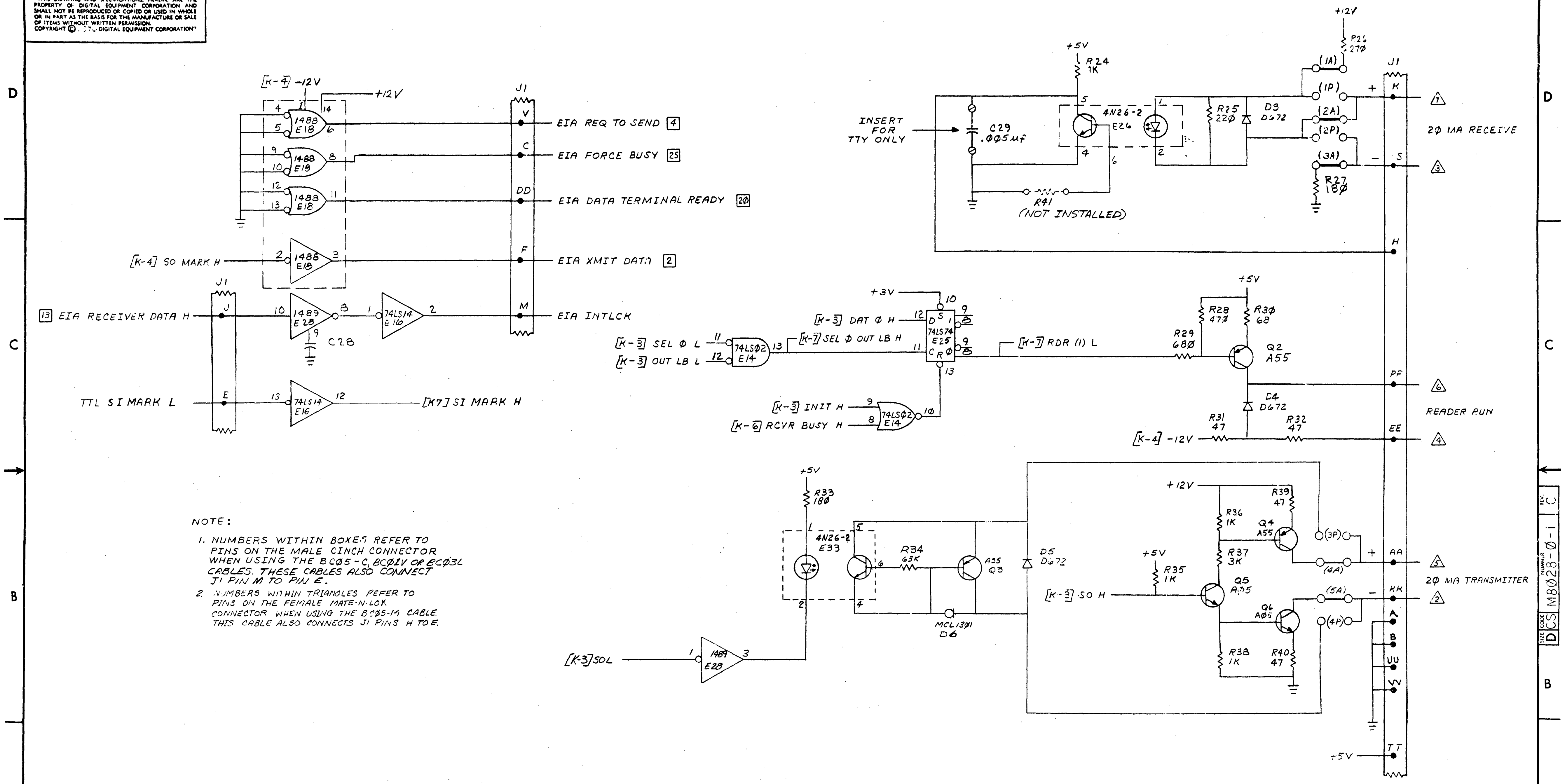
[K-4] -12V
+12V
1488 E18
1489 E28
1488 E18
74LS14 E16
J1
V
C
DD
F
M
E
J
EIA REQ TO SEND 4
EIA FORCE BUSY 25
EIA DATA TERMINAL READY 20
[K-4] SO MARK H
EIA XMIT DATA 2
13 EIA RECEIVER DATA H
C28
EIA INTLCK
TTL SI MARK L
[K7] SI MARK H
+5V
R24 1K
INSERT FOR TTY ONLY
C29 .005μf
4N26-2 E26
R25 220
D3 D672
R41 (NOT INSTALLED)
+12V
R26 270
(1A)
(1P)
(2A)
(2P)
(3A)
R27 180
K
S
H
20 MA RECEIVE
+3V
[K-3] DAT 0 H
[K-3] SEL 0 L
[K-3] OUT LB L
74LS02 E14
[K-3] SEL 0 OUT LB H
74LS74 E25
[K-3] RDR (1) L
[K-3] INIT H
[K-6] RCVR BUSY H
74LS02 E14
R28 470
R30 68
R29 680
Q2 A55
D4 D672
R31 47
R32 47
[K-4] -12V
PF
EE
READER RUN
R33 180
4N26-2 E33
R34 63K
A55 Q3
D5 D672
MCL1301 D6
[K-3] SOL
1489 E28
+12V
R36 1K
R39 47
Q4 A55
R37 3K
+5V
R35 1K
[K-3] SO H
Q5 A05
Q6 A05
R38 1K
R40 47
(3P)
(4A)
(5A)
(4P)
AA
KK
A
B
UU
VV
TT
20 MA TRANSMITTER
+5V

NOTE:

1. NUMBERS WITHIN BOXES REFER TO PINS ON THE MALE CINCH CONNECTOR WHEN USING THE BC05-C, BC01V OR BC03L CABLES. THESE CABLES ALSO CONNECT J1 PIN M TO PIN E.
2. NUMBERS WITHIN TRIANGLES REFER TO PINS ON THE FEMALE MATE-N-LOK CONNECTOR WHEN USING THE BC05-M CABLE. THIS CABLE ALSO CONNECTS J1 PINS H TO E.

(CURRENT LOOP CKT)

[K-7]

REVISIONS		
CHK.	CHANGE NO.	REV.

TITLE ASYN LINE INTERFACE
SIZE D CODE CS NUMBER M8028-0-1 REV. C
SCALE — SHEET 6 OF 6
DIST.

DEC FORM NO. DRD 138

D CS M8028-0-1 C

25

REWORK INSTRUCTIONS:

ECO# 1

ETCH CUTS:

1-1 E5-5 SIDE 2
1-2 E5-6, SIDE 1 (UNDER E5)
1-3 E5-6, SIDE 2 (RIGHT SIDE OF PIN)
1-4 E5-8, SIDE 1 (UNDER E5)
1-5 E5-4, SIDE 2 (2 PLACES)
1-6 E5-1, SIDE 2
1-7 BOTTOM R21, SIDE 2 (LEFT SIDE)
1-8 E33-2, SIDE 2

WIRE ADDS (SIDE 1 UNLESS OTHERWISE NOTED)

1-9 FEED THRU AT RIGHT OF E17-8 TO E6-15.
1-10 TOP OF C26 TO E5-8.
1-11 E5-6 TO FEED THROUGH BELOW E16-7.
1-12 E6-16 TO FEED THROUGH BELOW E16-7.
1-13 FEED THROUGH AT LEFT OF BOTTOM OF R21 TO FEED THROUGH BELOW C26.
1-14 FEED THROUGH AT RIGHT OF E5-4 TO E5-4.
1-15 FEED THROUGH AT RIGHT OF E5-4 TO E6-8.
1-16 E5-1 TO E6-6.
1-17 E5-2 TO E6-5.
1-18 E6-13 TO E6-12.
1-19 E6-9 TO E6-4.
1-20 E6-2 TO E11-10.
1-21 E6-14 TO E6-2.
1-22 TOP OF R21 TO TOP OF R22 (SEE NOTE 3)
1-23 BOTTOM OF R21 TO FEED THROUGH AT LEFT OF BOTTOM OF R21 (SEE NOTE 3).
1-24 FEED THROUGH BELOW E19-10 TO E24-8.
1-25 ("-") NEG. SIDE OF C2 TO ("+") POS. OF C27.
1-26 E10-9 TO E14-7.
1-27 E33-2 TO E28-3
1-28 E28-1 TO FEED THROUGH AT RIGHT OF E7-8.
1-29 E4-4 TO E11-11

ECO # 2

COMPONENT DELETES SIDE 1:

2-1. DELETE R24 (PN 1303177)
2-2. DELETE I.C. E26 (PN 1911998-01)
2-3. DELETE I.C. E33 (PN 1911998-01)

COMPONENT ADDS SIDE 1:

2-4. ADD R24 (PN 1300365)
2-5. ADD E26 (PN 1911998-02)
2-6. ADD E33 (PN 1911998-02)

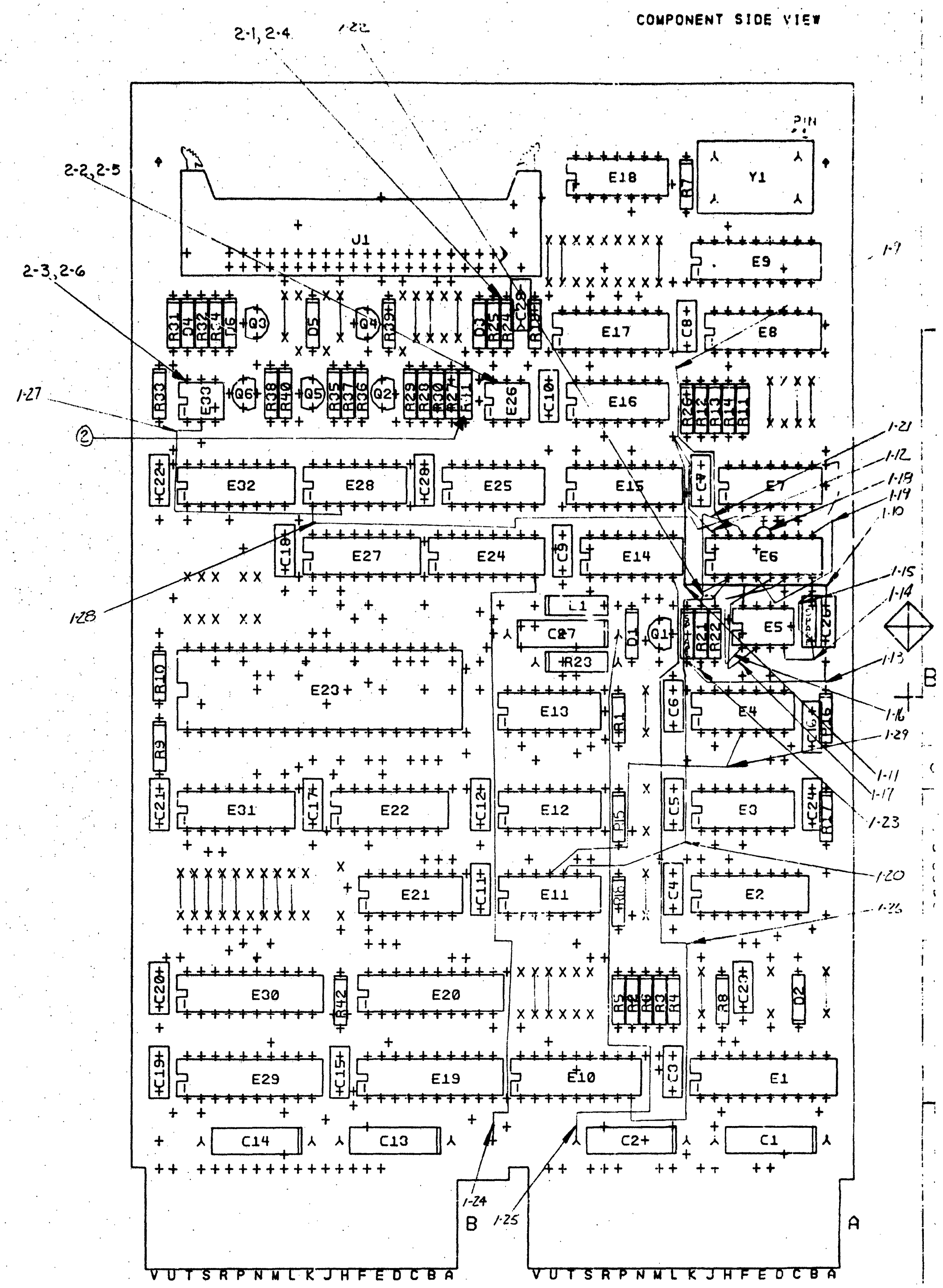
COMPONENT SIDE VIEW
2-1, 2-4
1-22
2-2, 2-5
2-3, 2-6
1-27
②
1-28
1-7
1-21
1-12
1-18
1-19
1-10
1-15
1-14
1-13
1-16
1-29
1-11
1-17
1-23
1-20
1-26
1-24
1-25
J1
Y1
PIN
E1
E2
E3
E4
E5
E6
E7
E8
E9
E10
E11
E12
E13
E14
E15
E16
E17
E18
E19
E20
E21
E22
E23
E24
E25
E26
E27
E28
E29
E30
E31
E32
E33
C1
C2
C13
C14
C27
R23
L1
Q1
Q2
Q3
Q4
Q5
Q6
B
A
V U T S R P N M L K J H F E D C B A
V U T S R P N M L K J H F E D C B A

NOTES:

1. 6 HOLES .0465 [+.000-.0045] MAYNARD ONLY
2. R41 NOT INSERTED
3. THIS CONNECTION IS MADE ON SIDE 2 BY BENDING THE RESISTER LEAD OVER TO THE ADJACENT FEED THROUGH.

REV	CHANGE NO	CHK
B	M8028-1	JA
	7 APR 78	
	M.MICHAUD	
	11 APR 78	
C	M8028-2	
	Zurcher 27 ... 78	
	J.CURTIS	
	13 July 78	EK

ETCH REV. B
P.C. DESIGN DATA BASE REV. B

SIGNATURES	DATE
DRN. Frank Smart	8-77
CHK'D. Frank Smart	8-77
ENG.	8-9-77
PROJ.ENG.	8-9-77
PROD.	[illegible]
SCALE 2-1	
SHT. 1 OF 3	
NEXT HIGHER ASSY. B-UD-M8028-0-0	

digital

TITLE ASYNCHRONOUS LINE INTERFACE

SIZE	CODE	NUMBER	REV
D	UA	M8028-0-0	C

ML.

26

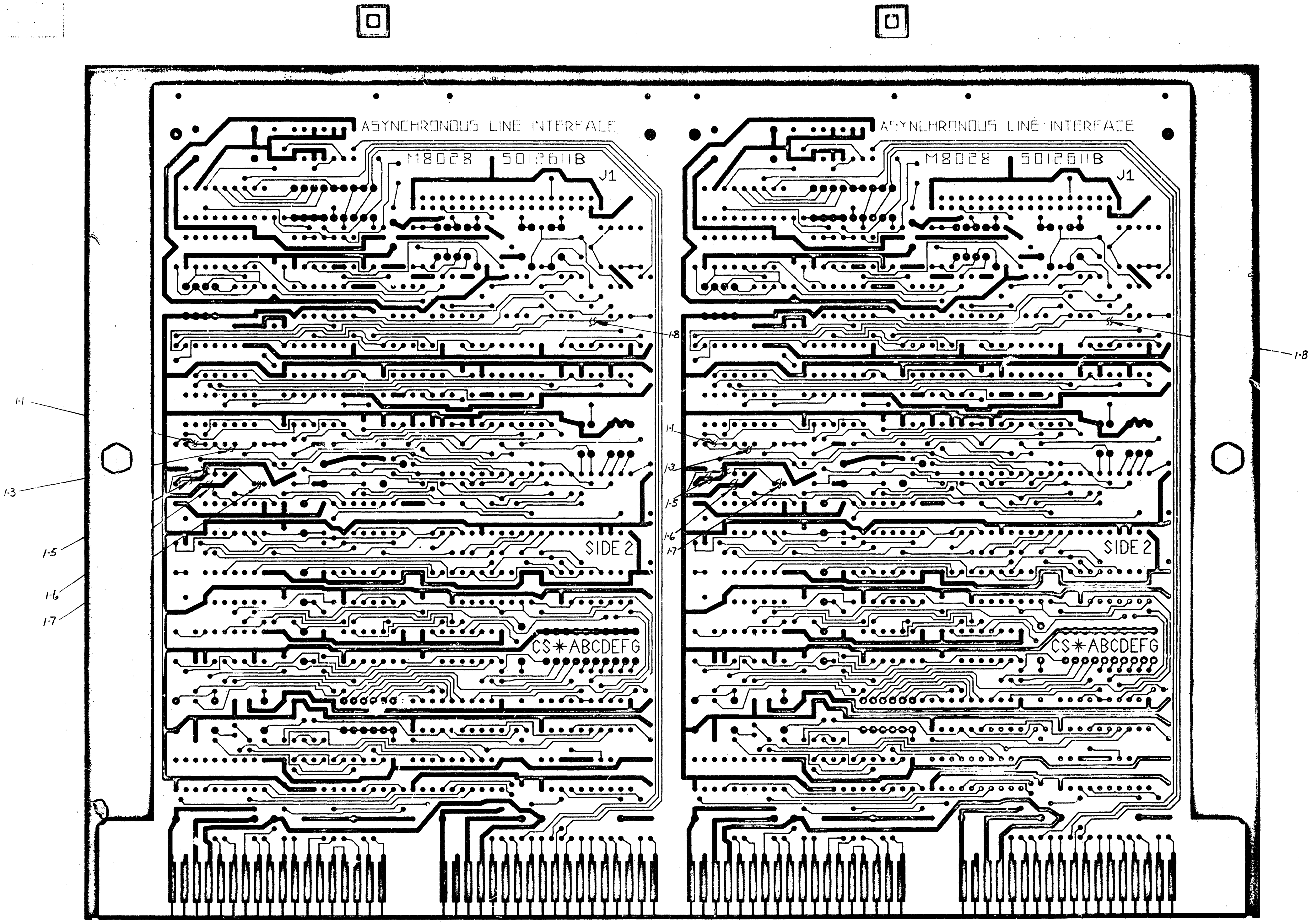
ASYNCHRONOUS LINE INTERFACE
M8028 5012611B
J1
SIDE 2
CS✱ABCDEFG
ASYNCHRONOUS LINE INTERFACE
M8028 5012611B
J1
SIDE 2
CS✱ABCDEFG
1-1
1-3
1-5
1-6
1-7
1-8
1-1
1-3
1-5
1-6
1-7
1-8

TITLE	SIZE	CODE	NUMBER	REV.
A L I	D	UA	M8028-0-0	C

SCALE 2 - 1 SHEET 2 OF 3 DIST

8 7 6 5 4 3 2 1

THIS DRAWING AND SPECIFICATIONS, HEREIN, ARE THE PROPERTY OF DIGITAL EQUIPMENT CORPORATION AND SHALL NOT BE REPRODUCED OR COPIED OR USED IN WHOLE OR IN PART AS THE BASIS FOR THE MANUFACTURE OR SALE OF ITEMS WITHOUT WRITTEN PERMISSION
COPYRIGHT © DIGITAL EQUIPMENT CORPORATION"

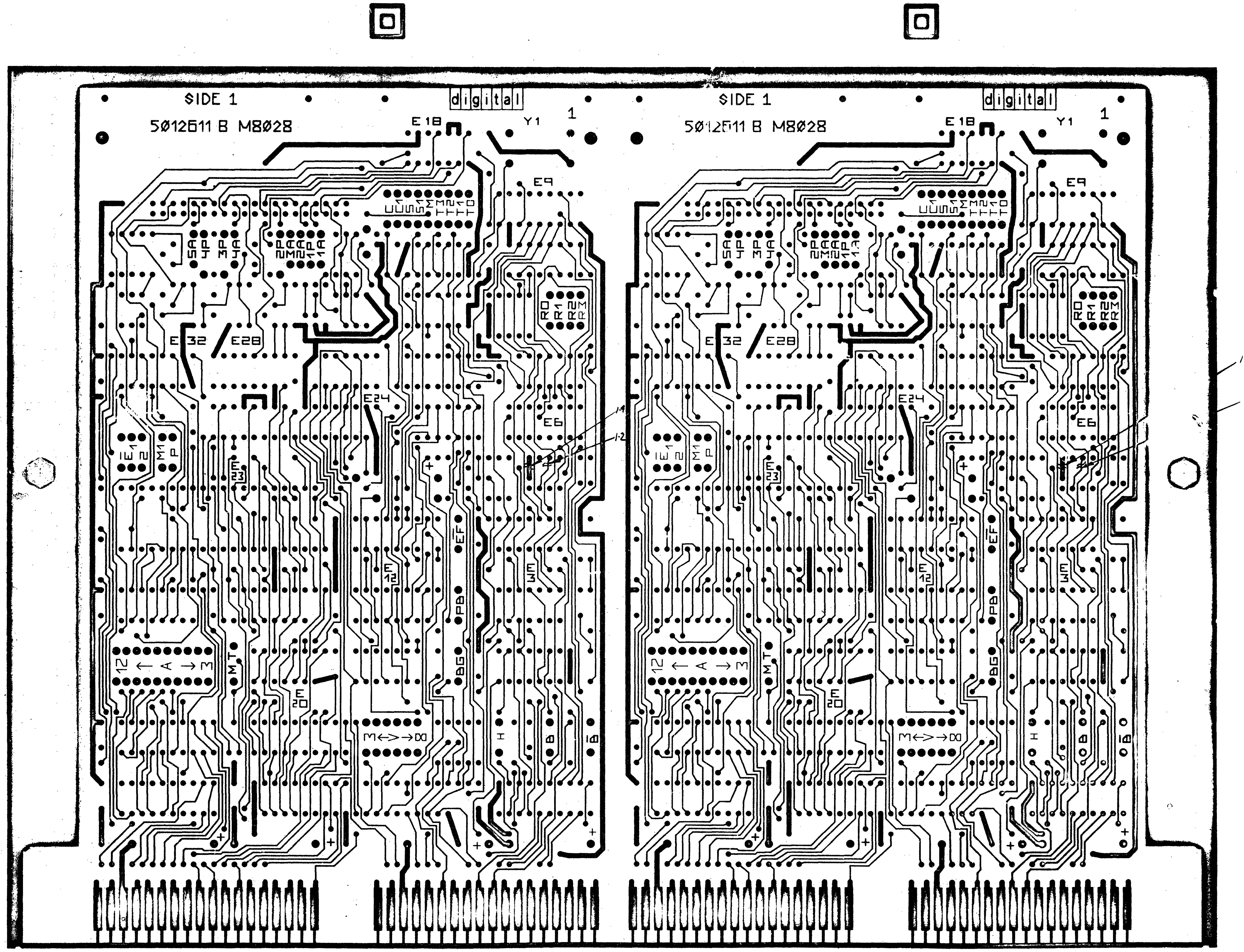
SIDE 1
5012511 B M8028
digital
E18
Y1
1
E9
SA 4P 3P 4A
2P 2M 2A 1P 1A
R0 R1 R2 RM
E32
E28
E24
E6
E2
M1 P
E23
E12
EF
WM
PB
BG
MT
E20
12 ← A → 3
M<->->DD
H
B
1-4
1-2

REVISIONS		
CHK	CHANGE NO.	REV.

TITLE A L I

SIZE D CODE UA NUMBER M8028-0-0 REV. C

SCALE 2 - 1 SHEET 3 OF 3 DIST.

28

DIGITAL EQUIPMENT CORPORATION
MAYNARD MASSACHUSETTS

PACKAGING INSTRUCTION	REV:	DATE:
TITLE INSTR PKG DISPLAY VT. 72/t		

MATERIAL REQUIREMENTS

Quantity	Purchase Specification No.	Description
1	9906261	Regular Slotted Carton (with interior parts)
7 ft	9905729	Carton Sealing Tape

PACKAGING INSTRUCTIONS

Step	Procedure
1.	Open Regular Slotted Carton (9906261). Remove top foam pad, top corrugated pad, front spacer and corrugated saddle.
2.	Place corrugated saddle on workbench.
3.	Place VT72/t terminal into saddle. Feet on terminal fit into holes in saddle. (Front of terminal is positioned toward larger piece of foam.)
4.	Place keyboard on front spacer with feet placed into holes. (Spacer bar faces away from foam.)
5.	Slide front spacer and keyboard into slot in foam on saddle.
6.	Using hand-holes, pick up saddle and slide into foam-lined carton.
7.	Route wires and cables behind terminal and along top curved portion of terminal cover.
8.	Place top pad on top of terminal. (Foam block is positioned to the rear.)
9.	Place top foam pad on top of terminal.
10.	Close and seal Regular Slotted Carton using one (1) strip of carton sealing tape (9905729) down the middle and one (1) strip across each end.

ENG 25 APR 78 Mike Cronin	APPD 17 MAY 78 R. E. Beimer	SIZE A	CODE SP	NUMBER 3700364-0-0	REV

DEC 8-(551)-1031-1-R671
DRA - 129

SHEET 1 OF 2

PACKAGING INSTRUCTION	REV:	DATE:
TITLE INSTR PKG DISPLAY VT 72/t		

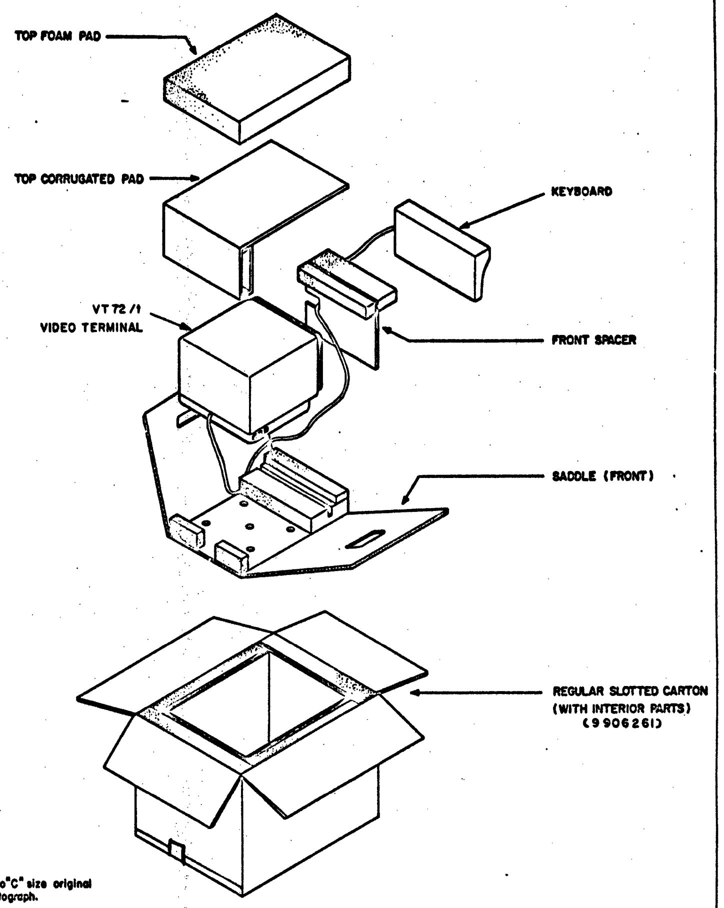

NOTE:
Make changes to "C" size original only and rephotograph.

ENG. 25 APR 78 Mike Cronin	APPD. 17 MAY 78 R. E. Beimer	SIZE A	CODE SP	NUMBER 3700364-0-0	REV

DRC-107

SHEET 2 OF 2

"THE MATERIAL HEREIN IS FOR INFORMATION PURPOSES ONLY AND IS SUBJECT TO CHANGE WITHOUT NOTICE. DIGITAL EQUIPMENT CORPORATION ASSUMES NO RESPONSIBILITY FOR ANY ERRORS WHICH MAY APPEAR HEREIN."

FIELD MAINTENANCE PRINT SET

TABLE OF CONTENTS

VT72 FIELD MAINTENANCE PRINT SET	B-TC-VT72-0-7
VT72 BASIC ASSY	E-UA-VT72-0-0
VT72 BASIC ASSY (PL)	A-PL-VT72-0-0
PRODUCT SPEC.	A-SP-VT72-0-2
LK05 INTERFACE	B-MH-M8656-0-6
LK05 INTERFACE	D-UA-M8656-0-0
LK05 INTERFACE (PL)	B-PL-M8656-0-0
KYBD INTERFACE	D-CS-M8656-0-1
LK05 TO LSI-11 BUS INTERFACE	A-SP-M8656-0-8
VT71 CONTROL SECTION	B-MH-M8657-YA-6
VT71 CONTROL SECTION	D-UA-M8657-YA-0
VT71 CONTROL SECTION (PL)	B-PL-M8657-YA-0
VT71 CONTROL SECTION	D-CS-M8657-YA-1
CONTROL MODULE	A-SP-M8657-0-8
VT71 VIDEO	B-MH-M8658-YA-6
VT71 VIDEO	D-UA-M8658-YA-0
VT71 VIDEO (PL)	B-PL-M8658-YA-0
VT71 VIDEO	D-CS-M8658-YA-1
VIDEO MODULE	A-SP-M8658-0-8
VT71 BUS GRANT BOARD	B-MH-M8659-0-6
VT71 BUS GRANT BOARD	D-UA-M8659-0-0
VT71 BUS GRANT BOARD (PL)	B-PL-M8659-0-0
VT71 BUS GRANT BOARD	C-CS-M8659-0-1
P.S. UNIT ASSY	E-UA-7015569-0-0
BOOTSWITCH & BRIGHTNESS CONTROL	B-MH-5411990-0-6
BOOTSWITCH & BRIGHTNESS CONTROL	D-UA-5411990-0-0
BOOTSWITCH & BRIGHTNESS CONTROL (PL)	B-PL-5411990-0-0
BOOTSWITCH & BRIGHTNESS CONTROL	D-CS-5411990-0-1
MODULE ECO HISTORY	B-MH-5411776-0-6
H780 POWER SUPPLY	D-CS-5411776-0-1
ASSY/DRILLING HOLE LAYOUT	D-AH-5411776-0-5
PROCESSOR	A-PL-KD11-HA
MODULE ECO HISTORY	B-MH-M7270-0-6
PROCESSOR	D-CS-M7270-0-1
HARNESS, A.C. POWER	E-IA-7015568-0-0
HARNESS, D.C. POWER	D-IA-7015543-0-0
TRANSFORMER ASSY	D-IA-7015517-0-0
HARNESS, SPEAKER	C-IA-7012279-0-0
CABLE, VT72 KEYBOARD	D-IA-7014607-05
CABLE, BRIGHTNESS POT	C-IA-7012446-0-0
LOGIC ASSY	D-AD-7014609-0-0
VT72 BACKPLANE	D-UA-7014605-0-0
CABLE, VIDEO	C-IA-7012576-0-0
ACCEPTANCE PROC.	A-SP-VT72-0-5

UNIT VARIATIONS COVERED BY THIS PRINT SET
VT72-AA
VT72-AD

VT72/VOL 2

Field Maintenance Print Set

Digital Equipment Corporation

PRINT SET ORDER NO.
MP00613

REVISIONS	
REV.	
CHG. NO.	
DATE	

USED ON OPTION/MODEL	DRN.	DATE
VT72	DBRIGHAM	6 APR 78
	CHK'D Brigham	DATE 14 APR 78
	PROJ. ENG. M. Roose	DATE 14 APR 78
SHEET I OF 1	FIELD SERV. P. Carroll	DATE 5 MAY 78

digital

TITLE: VT72 FIELD MAINT.
PRINT SET

SIZE	CODE	NUMBER	REV.
B	TC	VT72-0-7	

DIST.

EN-01124-16-N675-(327)

DRB 124

LEGEND	
NUMBER	VARIATION
VT72-AA	115 VOLTS
VT72-AD	230 VOLTS

NOTES:
1. USE EXISTING HARDWARE

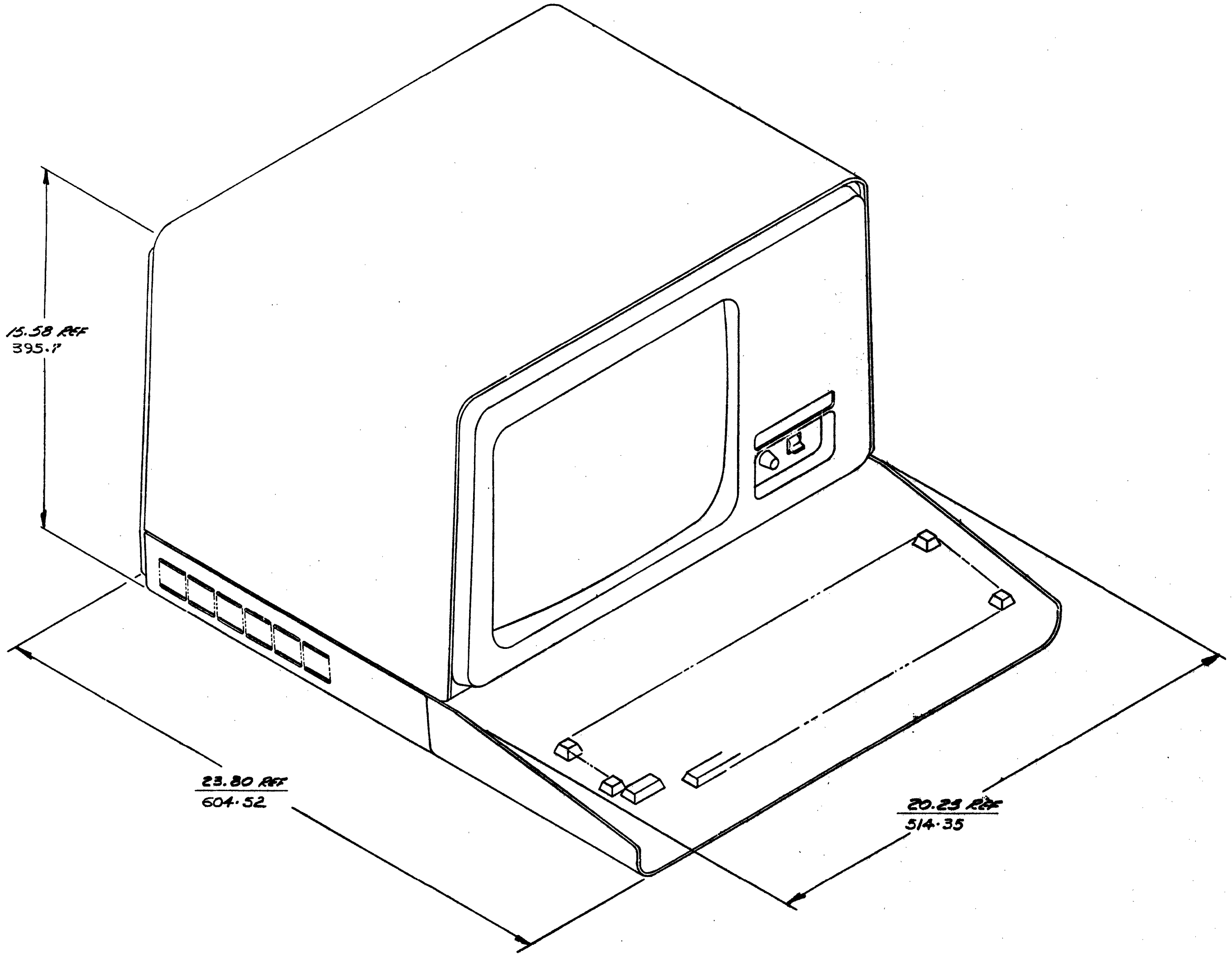

CAUTION OFF SHEET PARTS LIST REFER TO A-PL-VT72-Ø-Ø

REVISIONS				
REV.	CHANGE NO.	CHK.		
A	VT72-MKØØ3		H. Dinsmore 6-14-78	D.O'CONNELL D. O'Connell 6-20-78
B	VT72-MKØØ4			D.O'CONNELL Don O'Connell 18-SEP-78

DEC FORM NO. DEC 100-5

DESCRIPTION	DWG./PART NO.	ITEM NO.

UNLESS OTHERWISE SPECIFIED DIMENSIONS ARE IN INCHES

ANGLES ±0° 30'	CLASS OF ACCURACY (CHECK ONE)	NOMINAL DIMENSION RANGE INCHES					
		OVER 0 TO 0.2	OVER 0.2 TO 1.2	OVER 1.2 TO 4.0	OVER 4.0 TO 12.0	OVER 12.0 TO 40.0	OVER 40.0 TO 80.0
SURFACE QUALITY IN MICROINCHES	MEDIUM ☐	±.004	±.008	±.012	±.016	±.024	±.04
	PREFERRED ☐	±.012	±.016	±.025	±.04	±.063	±0.1

QUANTITY & VARIATION

THIRD ANGLE PROJECTION

REMOVE BURRS AND BREAK SHARP CORNERS

DO NOT SCALE DWG

CHK'D [illegible] 78
ENG. [illegible] 78
PROJ. ENG. [illegible] 78
PROD. [illegible] 78

FIRST USED ON VT72

digital

TITLE VT72 BASIC ASSEMBLY

NEXT HIGHER ASSY. B-DD-VT72-Ø

MATERIAL SEE PARTS LIST

FINISH —Ø—

SCALE NONE

SHEET 1 OF 5

SIZE	CODE	NUMBER	REV.
E	UA	VT72-Ø-Ø	B

DIST.

E UA VT72-Ø-Ø B

MK

31

REFER TO MAINTENANCE MANUAL FOR MODULE UTILIZATION.

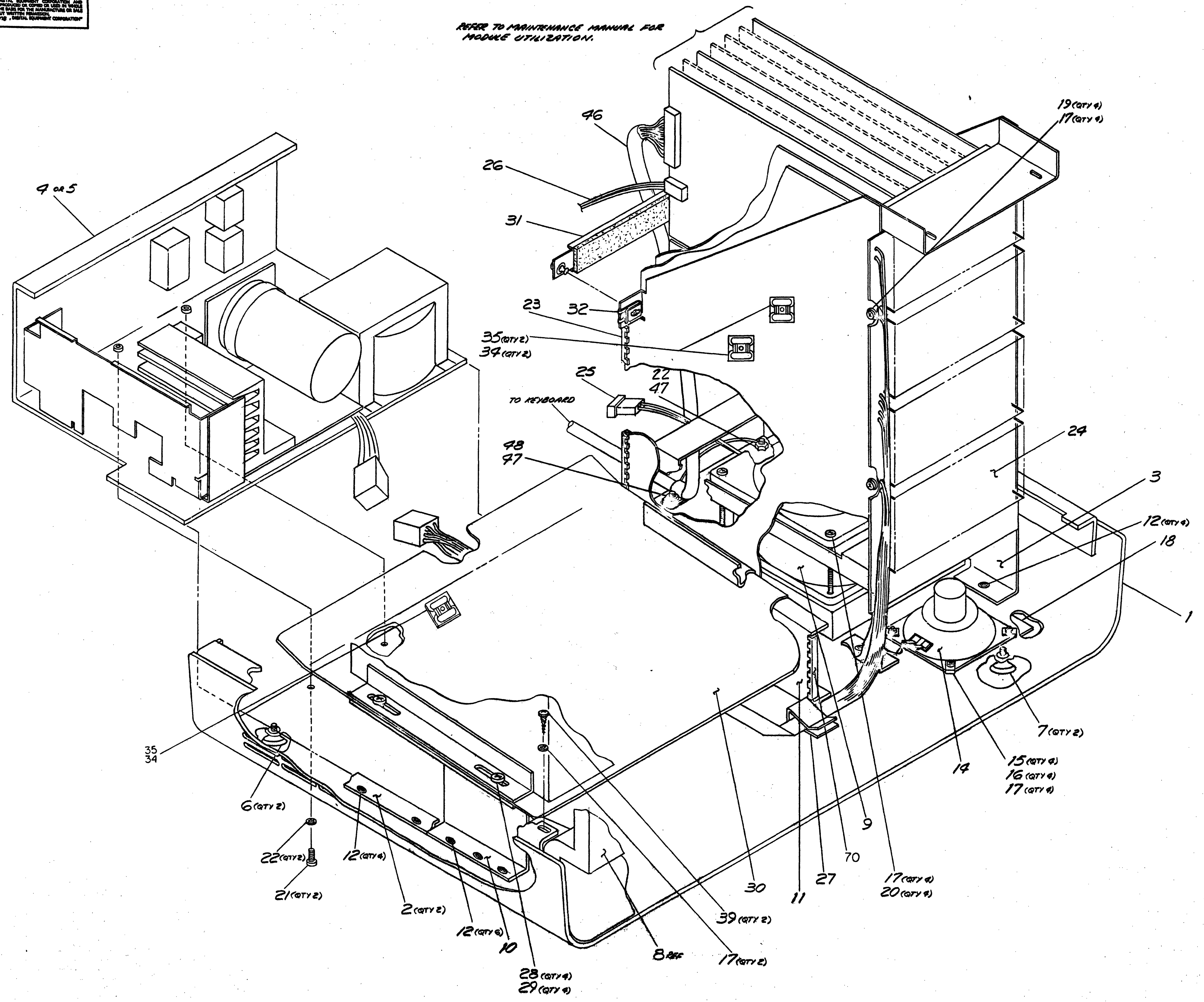
46
26
31
4 OR 5
19 (QTY 4)
17 (QTY 4)
23
32
35 (QTY 2)
34 (QTY 2)
25
22
47
TO KEYBOARD
48
47
24
3
12 (QTY 4)
18
1
7 (QTY 2)
15 (QTY 4)
16 (QTY 4)
17 (QTY 4)
14
9
70
17 (QTY 4)
20 (QTY 4)
27
11
30
39 (QTY 2)
17 (QTY 2)
8 REF
28 (QTY 4)
29 (QTY 4)
10
12 (QTY 4)
2 (QTY 2)
12 (QTY 4)
22 (QTY 2)
21 (QTY 2)
6 (QTY 2)
35
34

REVISIONS		
CHK	CHANGE NO.	REV.

TITLE	SIZE	CODE	NUMBER	REV.
VT72 BASIC ASSEMBLY	E	UA	VT72-0-0	B
SCALE NONE SHEET 2 OF 5	DIST.			

SIZE	CODE	NUMBER	REV.
E	UA	VT72-0-0	B

MK

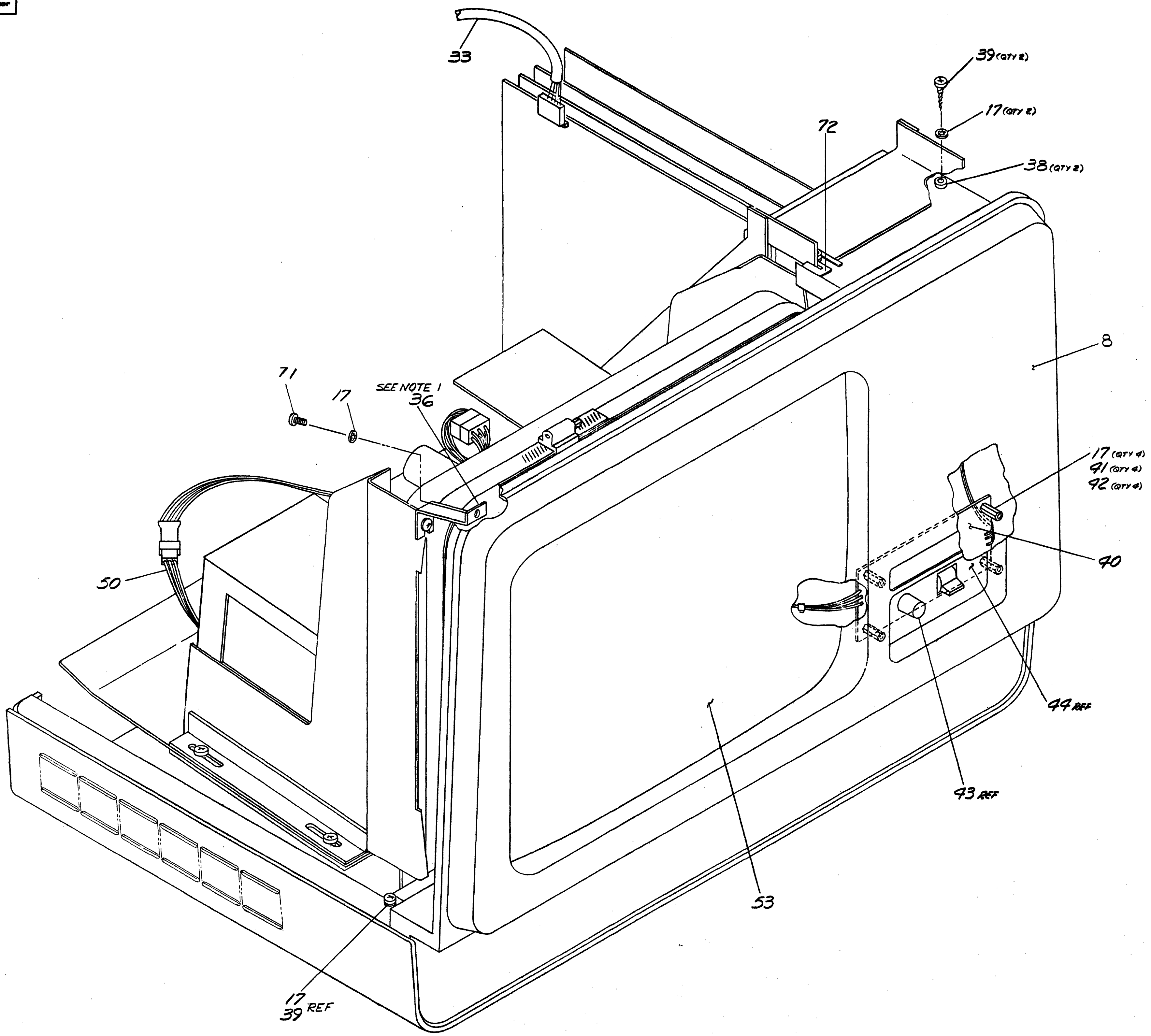
33
39 (QTY 2)
17 (QTY 2)
72
38 (QTY 2)
8
71
17
SEE NOTE 1
36
17 (QTY 4)
91 (QTY 4)
92 (QTY 4)
40
50
44 REF
43 REF
53
17
39 REF

REVISIONS		
CHK	CHANGE NO.	REV.

TITLE	SIZE	CODE	NUMBER	REV.
VT72 BASIC ASSEMBLY	E	UA	VT72-0-0	B
SCALE NONE SHEET 3 OF 5	DIST.			

MK

E UA VT72-0-0 B

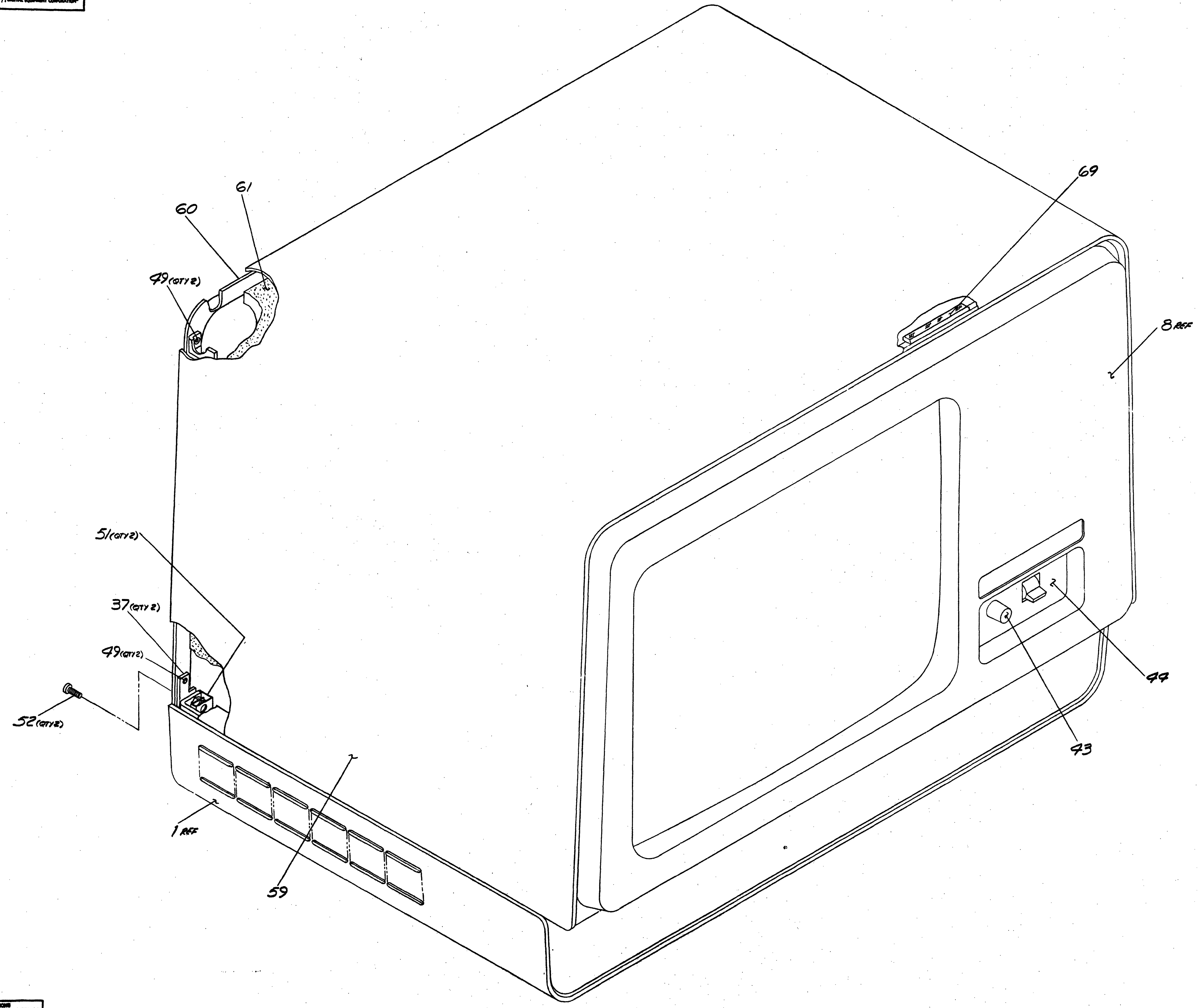
61
60
69
49 (QTY 2)
8 REF
51 (QTY 2)
37 (QTY 2)
49 (QTY 2)
52 (QTY 2)
44
43
1 REF
59

REVISIONS		
CHK	CHANGE NO.	REV.

TITLE	SIZE	CODE	NUMBER	REV.
VT72 BASIC ASSEMBLY	E	UA	VT72-0-0	5
SCALE NONE SHEET 4 OF 5	DIST.			

MK

SIZE	CODE	NUMBER	REV.
E	UA	VT72-0-0	B

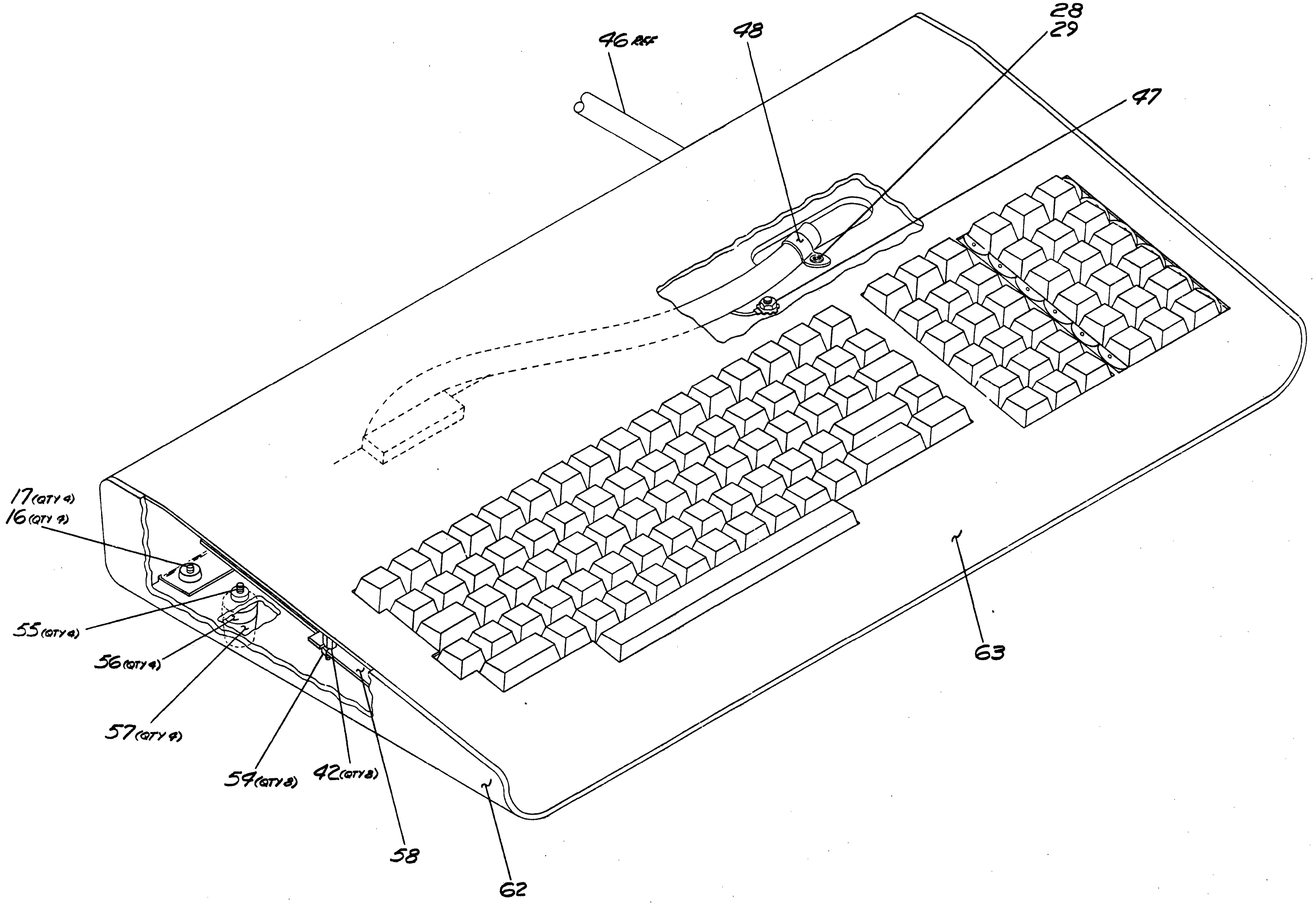
46 REF
48
28
29
47
17 (QTY 4)
16 (QTY 4)
55 (QTY 4)
56 (QTY 4)
57 (QTY 4)
54 (QTY 8)
42 (QTY 8)
58
62
63

REVISIONS
CHK | CHANGE NO. | REV.

TITLE VT72 BASIC ASSEMBLY
SIZE E | CODE UA | NUMBER VT72-0-0 | REV. B
SCALE NONE | SHEET 5 OF 5 | DIST.

E UA VT72-0-0 B

MK

DIGITAL EQUIPMENT CORPORATION
MAYNARD, MASSACHUSETTS
PARTS LIST

MADE BY R. ROBICHAUD
DATE 24 FEB 78
ENG M. Roosa
DATE 14 APR 78
CHECKED Brigham
DATE 14-APR 78
PROD Bob Cooke
DATE 14 APR 78
SECTION 1
ISSUED SECT. 1

QUANTITY VARIATION

ITEM NO.	DWG NO./PART NO.	DESCRIPTION	VT72-AA	VT72-AD
1	D-IA-7014604-0-0	PAN ASSY, BOTTOM	1	1
2	B-MD-7420560-0-0	BRACKET, POWER SUPPLY SUPPORT	2	2
3	E-IA-7014125-0-0	CAGE, CARD	1	1
4	E-UA-7015569-00	POWER SUPPLY ASSY (115V)	1	-
5	E-UA-7015569-01	POWER SUPPLY ASSY (230V)	-	1
6	1214998-00	GLIDE, ADJ SWIVEL .5 IN LG	2	2
7	1214998-01	GLIDE, ADJ SWIVEL 1.5 IN LG	2	2
8	1215419	BEZEL, VT72	1	1
9	1213185-0-0	AIR MOVING DEVICE (70cFM)	1	1
10	D-IA-7420032-0-0	BRACKET, MONITOR (L.H.)	1	1
11	C-IA-7420604-0-0	BRACKET. MONITOR (R.H.)	1	1
12	9000030-02	RIVET, DOMED HEAD	18	18
13	C-IA-BC03T-25-0	CABLE, DLV11 TO HOST (NOT SHOWN)	1	1
14	1210299-00	SPEAKER 2.5" PERM MAGNET	1	1
15	9008423-00	NUT-FLOATING CLIP 6-32	4	4
16	9006023-01	SCR, PHL PAN HD 6-32 X .44	8	8
17	9006633-00	WASH, INT TOOTH LOCK #6	25	25
18	D-MD-7419542-0-0	SCREEN	1	1
19	9006021-01	SCR, PHL PAN HD 6-32 X .31	4	4
20	9006031-01	SCR, PHL PAN HD 6-32 X 1.75	4	4
21	9006039-01	SCR, PHL PAN HD 8-32 X .50	2	2
22	9006634-00	WASHER, INT TOOTH LOCK #8	3	3

TITLE VT72 BASIC ASSEMBLY
ASSY NO. E-UA-VT72-0-0
SHEET 1 OF 4
SIZE A
CODE PL
NUMBER VT72-0-0
REV C
ECO NO. MK005
DIST
DEC FORM DRA 110
MK

DIGITAL EQUIPMENT CORPORATION
MAYNARD, MASSACHUSETTS
PARTS LIST

MADE BY R. ROBICHAUD
DATE 24 FEB 78
ENG M. Roosa
DATE 14 APR 78
CHECKED Brigham
DATE 14 APR 78
PROD Bob Cooke
DATE 14 APR 78
SECTION 1
ISSUED SECT. 1

QUANTITY VARIATION

ITEM NO.	DWG NO./PART NO.	DESCRIPTION	VT72-AA	VT72-AD
23	9007035-00	GROMMET CATERPILLAR	A/R	A/R
24	D-AD-7014609-0-0	VT72 BACKPLANE ASSY	1	1
25	C-IA-7015555-0-0	FAN LOGIC CABLE	1	1
26	C-IA-7012279-0-0	HARNESS, SPEAKER	1	1
27	9009636-00	CLAMP, CABLE ADHESIVE BACK	1	1
28	9006071-03	SCR, PHL TRUSS HD 10-32 X .38	5	5
29	9006636-00	WASH INTO TOOTH LOCK #10	6	6
30	D-MD-7419539-0-0	SHIELD MAGNETIC	1	1
31	C-MD-7014129-0-0	RETAINER ASSY P.C. CARD	1	1
32	9008196-00	¼ TURN RECEPTACLE	1	1
33	C-IA-7012576-1L	CABLE VIDEO	1	1
34	9008264-00	CABLE MOUNT ADHESIVE	3	3
35	9007031-00	CABLE TIE	3	3
36	B-MD-7419846-0-0	BRACKET, BEZEL	1	1
37	B-MD-7420894-0-0	STATIC BAND	2	2
38	9009283-00	SPACER HEX #6 X .125	2	2
39	9009805-00	SCR, PHL PAN HD SHEET METAL #6 X .75	4	4
40	D-UA-5411990-01	BOOT SWITCH & BRIGHTNESS CONTROL	1	1
41	9006026-01	SCR. PHL PAN HD 6-32 X .75	4	4
42	9008120-00	SPACER HEX #6 X .44	12	12
43	1213274-01	KNOB BRIGHTNESS	1	1
44	B-IA-7420033-0-0	LOGO BRIGHTNESS	1	1

TITLE VT72 BASIC ASSEMBLY
ASSY NO. E-UA-VT72-0-0
SHEET 2 OF 4
SIZE A
CODE PL
NUMBER VT72-0-0
REV C
ECO NO. MK005
DIST
DEC FORM DRA 110
MK

DIGITAL EQUIPMENT CORPORATION
MAYNARD, MASSACHUSETTS
PARTS LIST

MADE BY R. ROBICHAUD
DATE 24 FEB 78
ENG M. Roosa
DATE 14 APR 78
CHECKED Brigham
DATE 19 APR 78
PROD Bob Cooke
DATE 14 APR 78
SECTION 1
ISSUED SECT. 1

QUANTITY VARIATION

ITEM NO.	DWG NO./PART NO.	DESCRIPTION	VT72-AA	VT72-AD
45	3613210	TAG SERIAL	1	1
46	D-IA-7014607-05	CABLE VT72 KEYBOARD	1	1
47	9006563-00	NUT KEPS 8-32	3	3
48	9007086-00	CLAMP, CABLE	2	2
49	9000030-05	RIVET DOMED HEAD	4	4
50	C-IA-7012446-0M	CABLE BRIGHTNESS	1	1
51	9007786-00	NUT SPEED, 10-32	2	2
52	9000039-08	SCR, F.H. 10-32 X .50 LG. (BLACK)	2	2
53	3012537-01	DISPLAY RASTER MODULE	1	1
54	9008185-00	NUT KEPS 6-32	8	8
55	9006075-01	SCR, PHL PAN HD 10-32 X .75 LG.	4	4
56	B-MD-7415829-0-0	SPACER	4	4
57	9009267-00	BUMPER	4	4
58	3012538-01	KEYBOARD LK05-A 112 KEYS/12 LED	1	1
59	D-IA-7014603-0-0	COVER ASSY	1	1
60	1215420	COVER REAR	1	1
61	C-MD-7416633-01-0	FOAM (COVER ASSY)	1	1
62	E-IA-7419534-0-0	BASE, KEYBOARD	1	1
63	E-IA-7419533-0-0	COVER, KEYBOARD	1	1
64	D-UA-M8659-0-0	GRANT BOARD	1	1
65	A-PL-KD11-HA-0	KD11HA PROCESSOR	1	1
66	D-UA-M8658-YA-0	VT71 VIDEO MODULE	1	1

TITLE VT72 BASIC ASSEMBLY
ASSY NO. E-UA-VT72-0-0
SHEET 3 OF 4
SIZE A
CODE PL
NUMBER VT72-0-0
REV C
ECO NO. MK005
DIST
DEC FORM DRA 110
MK

DIGITAL EQUIPMENT CORPORATION
MAYNARD, MASSACHUSETTS
PARTS LIST

MADE BY R. ROBICHAUD
DATE 24 FEB 78
ENG M. Roosa
DATE 14 APR 78
CHECKED Brigham
DATE 19 APR 78
PROD Bob Cooke
DATE 14 APR 78
SECTION 1
ISSUED SECT. 1

QUANTITY VARIATION

ITEM NO.	DWG NO./PART NO.	DESCRIPTION	VT72-AA	VT72-AD
67	D-UA-M8657-YA-0	VT71 CONTROL SECTION	1	1
68	D-UA-M8656-0-0	LK05 INTERFACE	1	1
69	B-MD-7421669-0-0	FOAM, BEZEL	1	1
70	9007036-00	GROMMET, CATEPILLAR	A/R	A/R
71	9006028-01	SCR PHL PAN HD 6.32X1.0	1	1
72	C-MD-7421401-0-0	BRACKET, CARD CAGE	1	1

TITLE VT72 BASIC ASSEMBLY
ASSY NO. E-UA-VT72-0-0
SHEET 4 OF 4
SIZE A
CODE PL
NUMBER VT72-0-0
REV C
ECO NO. MK005
DIST
DEC FORM DRA 110
MK

This document contains confidential proprietary information of DEC. This information shall not be disclosed to persons outside the employ of DEC, except by DEC personnel so authorized by DEC, and only for use by such other persons in the design, production or manufacture of products for DEC.
Copyright © Digital Equipment Corporation.

DIGITAL EQUIPMENT CORPORATION
MAYNARD, MASSACHUSETTS

ENGINEERING SPECIFICATION DATE 2/28/78

TITLE VT72 PRODUCT SPECIFICATIONS

REVISIONS

REV	DESCRIPTION	CHG NO	ORIG	DATE	APPD BY	DATE

ENG	APPD	SIZE	CODE	NUMBER	REV
	Steve Gross	A	SP	VT72-0-2	

Section 0 - OVERALL DESCRIPTION

The VT72 is an LSI-11 based upper/lower case intelligent terminal programmed to perform complex editing tasks by interaction between the user, the keyboard and a raster scan display.

Most of the features of this terminal will be defined by software. These features will be listed in the section under "OVERALL EDITING FEATURES", but will only describe the hardware necessary to interact with the software to make an editing terminal. A separate document will describe the software and detailed features of the VT72 as an editing terminal.

The VT72 is a table-top unit with monitor, keyboard, power supply, logic, fans, etc., in the one enclosure. Quad or half-quad modules plug into a double system unit wired assembly. There is room in the wired assembly for expansion to 28K of memory and/or expansion of other Q bus controllers. See the appendix for the layout of the wired assembly.

As shown in the block diagram in the appendix, the VT72 is a standard LSI-11 with the addition of two special modules to drive the display, and one special module to read the keyboard and drive the keyboard lights. All other modules are standard LSI-11 modules.

The basic VT72 does not contain mass storage although room for expansion of the Q bus to include a floppy disk control is available in the basic VT72. The VT72 without mass storage is loaded from a host computer via the DLV11-F serial asynchronous line interface module.

VT72 User Specifications Summary

- 15" Alphanumeric Display
- 24 Rows of Characters
- 80 Characters per Row
- 256 Code Extended Character Set
- 4 Special Display Modes
    - Blink
    - Bold
    - Underline
    - Half Reverse Video
- DEC Standard Main Keyboard
- 36 System Defined Function Keys
- 16 User Definable Function Keys
- 12 Indicator Lights
- On/Line or Off/Line Operation
- Programmable Character Set

Section 1 - SPECIFICATIONS

1.0 General

These are the general specifications of the hardware but do point out features possible when software is added. If the feature is performed by software, this fact is noted in the feature description.

1.0.1 The displayable screen area is 240 horizontal sweep lines, each line made up of 800 dot positions. A character is made up of a 10 X 10 dot matrix. The screen is therefore made up of 24 character rows, and each row contains 80 characters.

1.0.2 Individual characters can be displayed in normal, reverse video, bold and underline modes. These modes are additive, ie., bold reverse video. Under program control, individual characters can also be made to blink. They can be made half-intensity by displaying the character on alternate sweeps. The only limitation to character display modes is that there should not be more than 20 changes in display mode per character row. For example, 10 non-contiguous reverse video (or bold or blink or underline) blocks of characters can be displayed in the same row as 10 non-contiguous blocks of characters. If the limitation is exceeded, the screen will flicker.

An alternate method of programming is available for applications that require extensive character mode changes. The programmable character set of 256 characters can be used to describe characters of different display modes. For example, the first 128 characters could be normal while the second 128 characters could be the same characters except in reverse video.

1.1 Display Monitor

The monitor is a standard 15 inch CRT. There are 80 characters per row, 24 rows; normal, blink, bold, underline and half-intensity reverse video. Half-intensity by software of normal, underline, and half-intensity reverse video is possible by turning off selected portions of the display on alternate sweeps. Blink rate is controlled by the software.

1.2 Keyboard (LK05 Var. -01)

The sculptured keyboard has N key rollover and uses Hall effect devices.

The parallel keyboard produces unique codes for each key. The main keyboard is a DEC standard keyboard with the addition of 16 keys above the normal top row of keys.

There are two function pads, each containing 18 keys. The right most function pad has 6 lights down each side of the pad. The distance between the two pads is ½ a key width so 1.5 wide key caps can be used to fill the space between the two pads. In this case, the left most lights must be removed.

1.2.1 Unique Features

Some function pad keys produce one code when depressed and another code when released. This allows the software to carry out a function at an arbitrary speed which is pleasing to the human operator (ie., scroll) but start and stop this function when the operator interacts with the key. These keys are: the last 3 rows of the left function pad, the last 2 rows of the right function pad, one key in the upper left corner of the right function pad, and the repeat key on the main keyboard.

1.2.2 Keycaps

This whole keyboard can be depopulated to tailor the keyboard to a particular application. In addition, all keycaps are removeable; keycaps can be ordered with clear plastic tops with a user-changeable insert for legend.

See the LK05 purchase specifications for more information on this keyboard. PS-30-12538, var. -01.

1.3 Interface to LSI-11

Text packed 2 characters to a 16 bit word is taken directly from memory (DMA) into the display controller. The controller has two shift registers that can store 80 characters each. One shift register drives the display while the other is loaded from memory. After a row of characters has been displayed, the functions of the two shift registers are reversed.

The method of accessing text in memory is similar to the 3-cycle data break of the PDP-8. In the VT72, a wired address contains a pointer of address to a list of parameter words and text address. This list is called a DISPLAY TABLE. A 16 bit parameter word and a 16 bit text address define a block of text to be displayed on the screen. These two words are in consecutive memory locations.

The PARAMETER WORD is a 16 bit word. The least significant 11 bits of the parameter word are the number of characters to be displayed. Another 4 bits in this 16 bit word define whether the text is to be blank, bold, underline or reverse video. The most significant bit (if a one) connects the parameter word to a JUMP instruction so that the contents of the next memory location are jammed into the word address. This feature and the bit assignment of these two 16 bit words is detailed in the section on programming.

The 16 bit text address word, also called a TEXT POINTER, is the current address of the text being loaded into the display controller shift register.

DISPLAY SEQUENCE - The display control reads text for the first character row while a blank row above the normal screen area is being displayed. The display control first reads the contents of the wired address (INITIAL DISPLAY TABLE POINTER) and uses it as an address to read the first parameter word and the associated text pointer word into hardware registers in the display control. The parameter word is used to determine the display mode and to count the number of text characters to be taken from memory. The display control used the text pointer to address memory, increments the hardware register containing this address and used hardware to count the number of characters read from memory equals the number of characters that were previously read from the least significant 11 bits of the parameter word.

If EOT is detected, the display controller stops access from memory until the whole display cycle is repeated.

If the number of characters specified in the parameter word have been read from memory by the display control, the display control will pick up another parameter word and text pointer. It will read the contents of the wired address, increment it by two and write the incremented information back into the memory. This incremented information will then be used as the address of the second text address/parameter word/text pointer pairs. The cycle then continues as before.

There can be a large number of parameter word and text pointer pairs to define BLOCKS OF TEXT. A block of text can be as large as 2048 characters or as small as 1 character. For example, the cursor is usually defined as a one character block. Each contiguous piece of text not in the same display mode must be a separate block. For example, if 3 words were displayed, the first word normal video, the middle word reverse video and the last word normal video, three blocks would define this video presentation. Text, of course, can be contiguous in memory or scattered in blocks throughout memory.

1.4 Character Generator

The character generator is capable of displaying 256 unique character codes. The character generator is loaded under program control when the terminal is first initialized. This means that changing characters does not involve hardware changes, only changes to a list in memory. This feature is known as a "programmable character set".

Characters are displayed in a 10 X 10 dot matrix. The whole screen is comprised of contiguous 10 X 10 dots squares, 80 to a line, in 24 lines, a total of 800 horizontal, 240 vertical dots. Because spaces must be left between characters and between lines, the actual character is usually displayed in a 8 X 8 matrix. The 9th horizontal scan line in the 10 X 10 matrix is underline. The 10th horizontal scan line is usually left blank as a space between character lines. The VT72 character layout is shown in the appendix. Computer convention shows numbering from 0 to 9 instead of 1 to 10.

The 10 horizontal and 10 vertical dots which define a character are generated by 10 "words", each 10 bits long. There is one 10 bit word for each of 10 horizontal scan lines which make up a character. Each 10 bit word therefore defines one horizontal scan line of a character.

The character generator is loaded from memory by the display controller. This information contains 20 words for each ASCII character plus the ASCII character. These words are 16 bits long.

The software starts this loading sequence by setting Bit 15 of the Command and Status register. When the display controller is finished displaying the current frame, it then reads the contents of a jumper selectable address, the character list pointer. The contents of this address is the starting address of a table containing the character generator information. These contents are read into a register that can be incremented and used by the display controller as an address to do DMA's from memory to the character generator RAM.

It is possible to change 1 or 256 characters in the character generator since the software has control of memory contents and therefore the starting address of the table, the length of the table and the data describing the displayed character to be associated with each ASCII code. Details of loading the character generator is contained in the programming section.

1.5 Panned Scrolling

The software of the LSI-11 can interact with the display hardware so scrolling occurs smoothly instead of jumping one character row at a time. When scrolling is requested from the keyboard, the software preloads a counter in the display control with a number that can vary from 6 to 17. This number represents the fraction of a character row the display will scroll, from 1/10 to 9/10 of a character row.

When scrolling text up, the top scan line disappears from the screen and a new scan line appears at the bottom of the screen. Software changes the text list pointers so 25 rows of characters instead of 24 rows of characters are displayed on the screen. Since there is only room on the screen for 24 complete rows, part of the first and last row will be missing. The offset number determines how much will be missing. If this number is 7, 10% of the top row and 90% of the bottom row will be missing. The software changes this number at a regular rate, which is some multiple of the display frame rate (60 HZ or 50 HZ). When the number reaches 17, 90% of the top row and 10% of the bottom row will be missing. The next time the software changes this number, the number will be changed to 6. At the same time, the text list pointer will be changed so only 24 rows of characters are displayed, the top row will have disappeared completely from the screen and the bottom row will be completely on the screen.

Scrolling downwards is similar.

1.6 Unique Codes

The display hardware detects 8 unique codes:
ASCII code -

00 & 200	END OF TEXT
01 & 201	END OF LINE
02 & 202	END OF LINE
03 & 203	END OF LINE

When an END OF LINE code is detected by the hardware, DMA from memory for that line is stopped and the rest of the shift register is loaded with the space code to effect a blank of the display line after the END OF LINE code.

When END OF TEXT code is detected, DMA from memory is stopped for the remainder of that display cycle and the screen is blanked from the END OF TEXT code to the bottom of the screen. Eight codes are provided so as to allow displayable and non displayable line terminators.

APPENDIX

VT72 BLOCK DIAGRAM

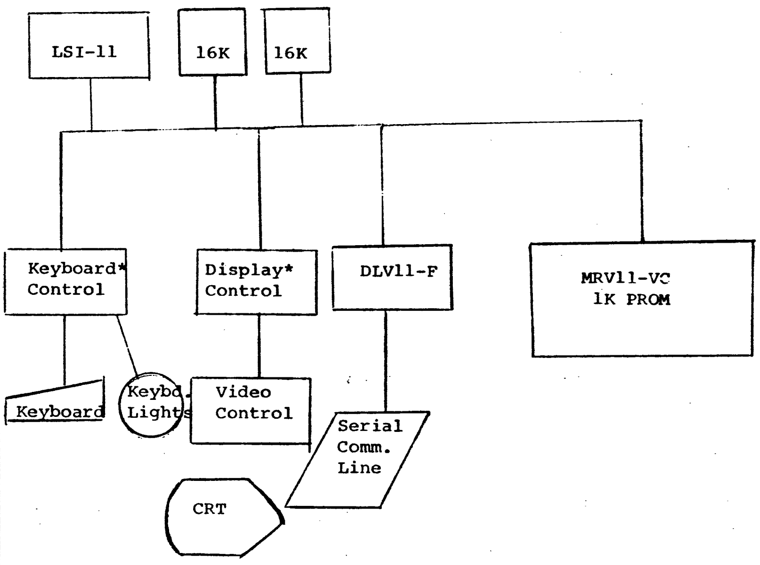

APPENDIX

VT72 Module Utilization

* Optional

16K
using
MSV11-DC
MOS Mem

1	Not Used	Not Used	2
4	" "	" "	3
5	" "	" "	6
8	" "	" "	7
9	LSI-11	*MRV11-VC	10
12	MSV11-DC (16K)	Grant Board	11
13	DLV11-F (Ser)	Keybd Control	14
15	Display	Control	
	Video	Control	

28K
using
MSV11-DC
MOS Mem

1	Grant Board	Not Used	2
4	Not Used	" "	3
5	" "	" "	6
8	" "	" "	7
9	LSI-11	*MRV11-VC	10
12	MSV11-DC (16K)	MSV11-DC (16K)	11
13	DLV11-F (Ser)	Keybd Control	14
15	Display	Control	
	Video	Control	

16K
using
MSV11-CD
MOS Mem

1	Grant Board	Not Used	2
4	Not Used	" "	3
5	" "	" "	6
8	" "	" "	7
9	LSI-11	*MRV11-VC	10
12	MSV11-CD		11
13	DLV11-F (Ser)	Keybd Control	14
15	Display	Control	
	Video	Control	

28K
Using
MSV11-CD
MOS Mem

1	Grant Board	Not Used	2
4	Not Used	" "	3
5	" "	" "	6
8	LSI-11	*MRV11-VC	7
9	MSV11-CD (16K)		10
12	MSV11-CD (16K)		11
13	DLV11-F (Ser)	Keybd Control	14
15	Display	Control	
	Video	Control	

Note: If no MRV11-VC in Conf. substitute grant board in slot.

2.0 Display Processor

The VT72 Display Processor consists of a M8657-YA and M8658-YA module. It is a microcontrolled device with DMA control over the LSI-11 bus. As such its operation is separate from the LSI-11 once its parameters have been set-up. The display will continue even if the LSI-11 has halted program execution. The VT72 has a writable character store which also operates as a DMA function. The character set is totally in volatile memory and must be rewritten at every power-up time. In addition, the display has the ability to smooth scroll (pan) and detect end of line (EOL) and end of screen (EOS).

The display processor generates a raster scanned video presentation composed of 240 scan lines made up of 800 dot positions. A character is made up of a 10 X 10 dot matrix. The raster is therefore made up of 24 character rows each containing 80 characters. See Purchase Spec. 30-12537 for a timing diagram of the video information.

3.0 Programming

3.1 VT72 Command And Status Register 177670 (Standard)

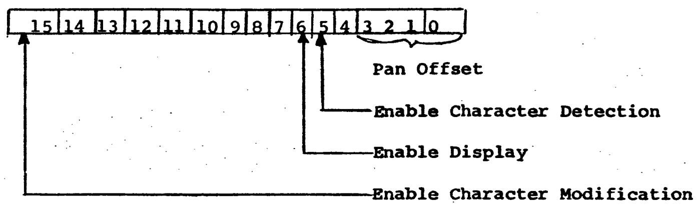

It is very important to remember that register is not a hardware register. It is a window into the microcontroller. The controller will only look at these bits at the correct time in relationship to raster on the screen. However, this does allow the unique ability of being able to redefine any single character while displaying. The microcontroller will use the vertical fly-back time to do this, and the screen will never flicker. The programming concepts will be discussed later. However, the individual bits will be identified now.

3.1.1 Pan Offset: <Bits 3-0>

This is a write only register which gives the display the capability of smooth scrolling. The register has a legal value range from 6 to 17. The value of 6 is the normal pan offset. The pan bits must always have some value whenever the register is loaded. Each increment of the pan register offsets the screen by one scan:

Scan Line	Pan Offset
0	6
1	7
2	10
3	11
4	12
5	13
6	14
7	15
8	16
9	17

Ex: When the pan register equals 10, 8 scans of Row 0 are displayed, 10 scans of Rows 1-23 and 2 scans of Row 24. It is important to note that although only 24 rows of text are displayed on the screen 25 rows are always loaded by the micro controller. To scroll up start the pan register at 6 and increment to 17 - to scroll down start at 17 and decrement to 6.

When scrolling the pan register may only be changed once per vsync (discussed later) and must be changed not less than once every other vsync or the screen will flicker. However, it may be incremented in an accelerating manner to as much as a whole row per vsync and still look smooth.

3.1.2 Enable Character Detection: <Bit 5>

This bit enables the action of the special characters for END OF LINE and END OF SCREEN. When bit 5 is a zero, these characters are treated as any other characters.

ASCII Character		
	0 & 200	END OF TEXT
	1 & 201	END OF LINE
	2 & 202	END OF LINE
	3 & 203	END OF LINE

These codes are detected by hardware but since the character generator is programmable, the codes will be displayed.

3.1.3 Enable Display Bit 6

This is a write only bit that when set enables the terminal to display. While displaying the microcontroller will give an interrupt every vsync time. Vsync is defined to be the time just after the microcontroller has loaded from the pan register and after it has picked up the initial address of the display list from the IDTP (Initial Display Table Pointer). At this point either of these values may be changed.

3.1.4 Enable Character Modification: Bit 15

This bit when set will initiate the writing of characters at an address pointed to by CLP (Character List Pointer). Whenever this bit is set the pan value must be set to 6 or the characters will be offset. The enable display and enable character detection bits may be on at this time. However, only one character may be written without screen flicker.

The list is terminated by a zero in the low order byte. When the micro controller is done loading, the terminating address will be deposited in the CLP. It is important to note that several precautions are necessary here.

1. If the micro controller is not displaying:
   - A. A random pattern of lines and characters will be displayed while writing. Finally before the display is enabled a strange pattern may be left on the screen.
   - B. While the CLP will contain the last loaded address after writing the CLP will contain a random address once the enable bit is turned on.

   - C. Both the Enable Display and the Enable Character Modification bits may not be set if the micro is not already displaying. This is due to the fact that the micro-controller may see the Enable Display bit before the Enable Character Modification bit and destroy the contents of the CLP. (See preceding Section B). Correct sequence of operation would be as follows:
     - I. Set up IDTP (Section 3.2.4) to point to EOS (Section 3.1.2) character.
     - II. Turn on display (screen should be blank because EOS has not been defined).
     - III. Wait 1/60 of a second. (Be sure bit has been seen).
     - IV. Write the character set and read display on (MOV #100146, @ #177670).
     - V. The micro-controller is ready to display.

2. If the micro controller is displaying:
   - A. The last loaded address will be returned to the CLP and won't change because the display is already on.
   - B. Only one character may be written at a time or the display may flicker.
   - C. If, however, it is desirable to write the entire character set as long as the last 2 lines of text are blank the display will go blank for the write time.

3.2 Hardware Vectors (Pointers)

	VT71		
XX0	360	PC	Vector Pair
XX2	362	PSW	
XX4	364	CLP - Character List Pointer	
XX6	366	DTP - Display Table Pointer	
XX10	370	IDTP - Initial Display Table Pointer	

3.2.1 Vector Pair:

Standard PDP11 interrupt vector pair micro controller interrupts here every vsync time.

3.2.2 Character List Pointer:

Should contain the first address of the character list before the enable character modification bit is set. The location may be used to determine when the micro controller is done since it returns the last loaded address to the CLP when done.

3.2.3 Display Table Pointer:

This is the micro controller's correct Display Table Address. Whenever the current display table's byte count overflows the micro controller goes to the next display adder by incrementing the address in this position by 4.

3.2.4 Initial Display Table Pointer:

The micro controller loads the DTP from this address just prior to vsync time.

3.3 Text Format

```
15             8 7             0
|  HIGH BYTE    |   LOW BYTE    |
```

Text can start or stop on a high byte or low byte. The full 8 bits are decoded to form a character. The appendix lists the standard 256 characters.

3.4 Character Data Format

The VT72 uses a 10 by 10 dot character matrix. To completely describe all the dots in the matrix requires 20 sequential memory locations. Each location contributes its low order 5 bits to the 10 X 10 matrix. The first word describes the first 5 bits of Line 0, the second word the last 5 bits of Line 0. However, the 5 bits in each word of the description appear in reverse (mirror image) order. The hibyte of each word is the ASCII Address (0-377) of the character being defined. Bits 6 and 7 of the lobyte must always be a one (as zeros they terminate the definition). Bit 5 is set to a one in the first half of a scan line, zero in the second half.

3.4.1 Character Definition Word

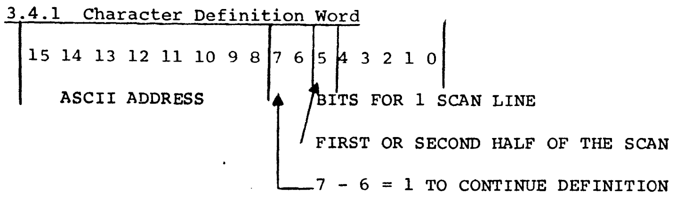

THE CHARACTER DEFINITION WORD FORMAT

Word	Raster Scan	Bit 5 = 1 First Half	Bit 5 = 0 Second Half
1	Scan 0	X	
2	Scan 0		X
3	Scan 1	X	
4	Scan 1		X
5	Scan 2	X	
6	Scan 2		X
7	Scan 3		X
8	Scan 3		X
9	Scan 4	X	
10	Scan 4		X
11	Scan 5	X	
12	Scan 5		X
13	Scan 6	X	
14	Scan 6		X
15	Scan 7	X	
16	Scan 7		X
17	Scan 8	X	
18	Scan 8		X
19	Scan 9	X	
20	Scan 9		X

```
 89   ; BELOW IS AN EXAMPLE OF THE CHARACTER "3".
 90   ; THE ARRAY IS DRAWN AS 2 WORDS BY 1Ø WORDS, IN EACH WORD, THE
 91   ; UPPER 11 BITS ARE SEPARATED FROM THE LOWER 5 BITS FOR LEGIBILITY.
 92   ; ALSO .'S REPLACE Ø'S AND X'S REPLACE 1'S IN THE LOW ORDER BITS.
 93   ;
 94   ; ØØ11ØØ11111 . . . . .        ØØ11ØØ1111Ø . . . . .
 95   ; ØØ11ØØ11111 X . X . .        ØØ11ØØ1111Ø . X . X .
 96   ; ØØ11ØØ11111 . . . . .        ØØ11ØØ1111Ø . . . . .
 97   ; ØØ11ØØ11111 . . . . .        ØØ11ØØ1111Ø . . . X .
 98   ; ØØ11ØØ11111 . . . . .        ØØ11ØØ1111Ø . . X . X
 99   ; ØØ11ØØ11111 . . . . .        ØØ11ØØ1111Ø . X . . .
1ØØ   ; ØØ11ØØ11111 . . X . .        ØØ11ØØ1111Ø . X . . .
1Ø1   ; ØØ11ØØ11111 . X . . .        ØØ11ØØ1111Ø . . X . X
1Ø2   ; ØØ11ØØ11111 . . . . .        ØØ11ØØ1111Ø . . . . .
1Ø3   ; ØØ11ØØ11111 . . . . .        ØØ11ØØ1111Ø . . . . .
1Ø4   ;
1Ø5   ;
1Ø6   ;
1Ø7   ;
1Ø8   ;
1Ø9   ;
11Ø   ; FINALLY THE EXPANDED REPRESENTATION OF "3".  EACH CHARACTER
111   ; REPRESENTS A BYTE IN THE DISPLAY, X CORRESPONDS TO A NON-BLANK
112   ; CHARACTER AND "-" CORRESPONDS TO A BLANK CHARACTER, OPTIONALLY,
113   ; XEROES MAY APPEAR ANYWHERE WITHIN THE DISPLAY.  THEY ARE NOT
114   ; SHOWN.
115   ;          - - - - - - - - - -
116   ;          - - X - X - X - X -
117   ;          - - - - - - - - - -
118   ;          - - - - - - X - - -
119   ;          - - - - - X - X - -
12Ø   ;          - - - - - - - - X -
121   ;          - - X - - - - - X -
122   ;          - - - X - X - X - -
123   ;          - - - - - - - - - -
124   ;          - - - - - - - - - -
```

3.5 Display Table

The display table consists of one or more entries (Display Blocks) each containing two elements. The parameter word which contains the display information and the byte count. Secondly the byte address where the display list begins. The maximum total display blocks per line is 20.

3.5.1 Parameter Word

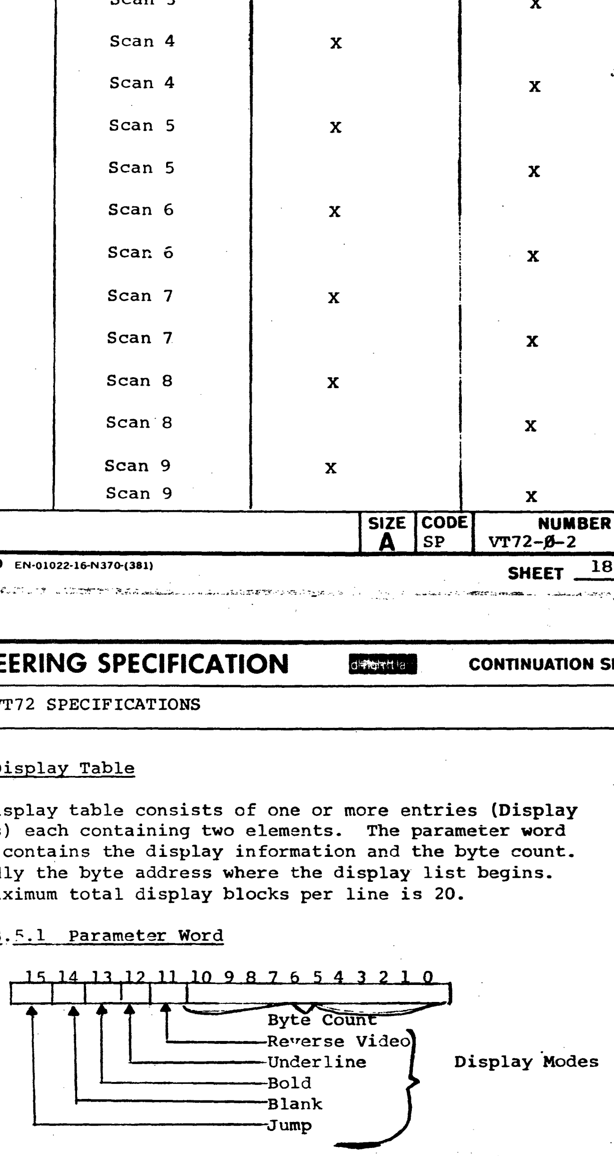

3.5.2 Byte Count:

Two's complement of the desired number of bytes to be displayed using this parameter word. Once the byte value has overflowed the microcontroller will continue on to the next sequential parameter word and address pair. The byte counts overflows at 3777 rather than 0 due to certain hardware constraints. If BC = 3777 is **loaded** the micro processor will go immediately to the next display block.

3.5.3 JUMP:

The JUMP is a command to the microcontroller when bit 15 is set the rest of the parameters word is ignored and the address that follows is jam loaded into the DTP. This address is the start of the new display list. Care must be taken in using JUMPS. As a general rule of thumb one JUMP has the same overhead as one display block. (ie., 1 JUMP + 19 BLOCKS = 20 Display Units).

NOTE: When the display processor is heavily used 14-20 display units per line 30-45% of all processor time will be devoted to DMA accessory for display.

3.5.4 Display Modes

These modes are tied to the particular block. The mode will continue through the block until the byte count overflows. Then the next modes are loaded with the new byte count. The microcontroller treats the blank bit the same as the others so the display list for that block must be valid (not EOL or EOS characters unless desired).

3.5.5 Reverse Video:

Reverses the intensification of the character matrix.

3.5.6 Underline:

Turns on the 9th scan line.

3.5.7 Bold:

Intensified by two the character matrix.

3.5.8 Blank:

Turns off the display during that display block. This would generally be used to make the display blink.

COMPONENT SIDE VIEW

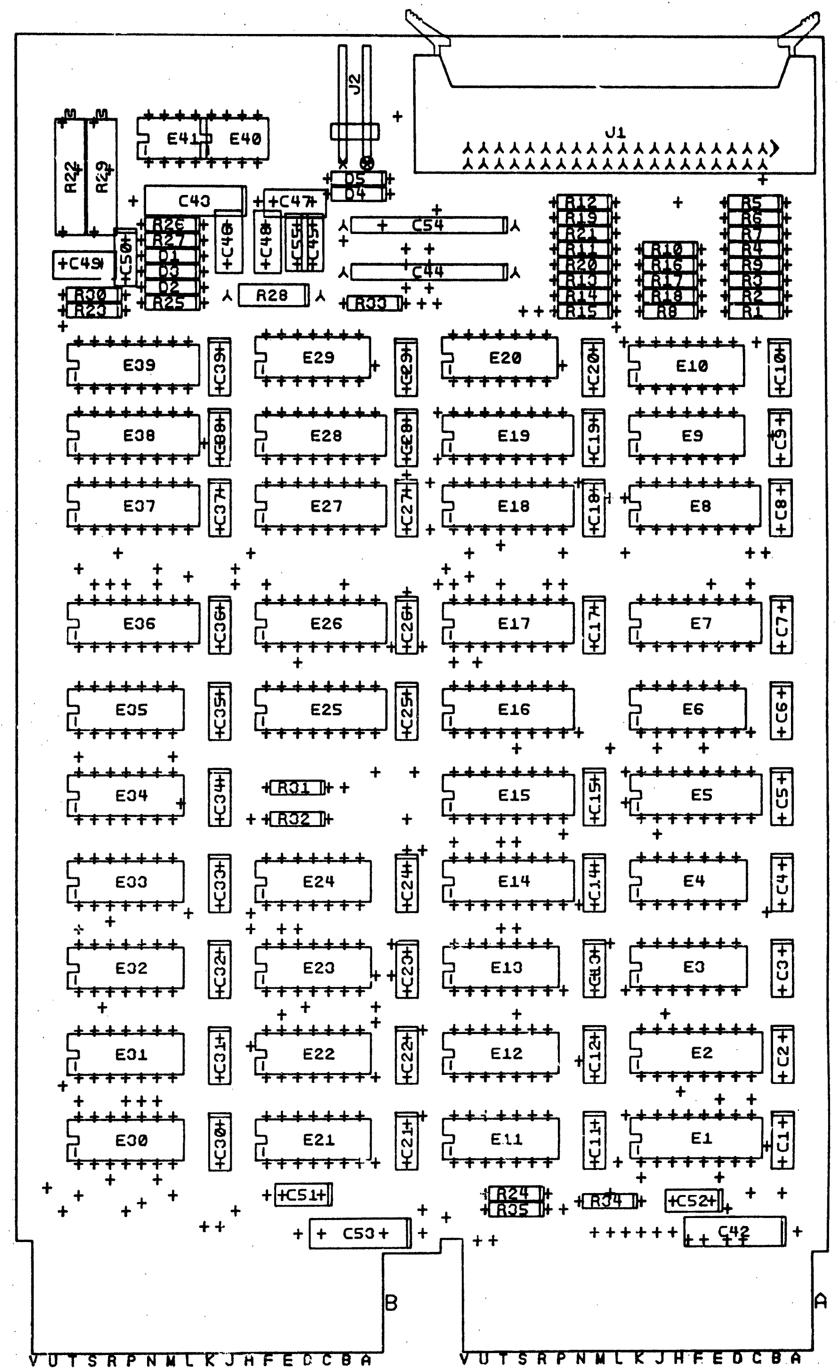
J2
J1
E41
E40
R22
R29
C43
C47
D5
D4
R26
R27
C46
C48
C53
C45
C54
C44
C49
C50
R30
R23
R25
R28
R33
R12
R19
R21
R11
R20
R13
R14
R15
R10
R16
R17
R18
R8
R5
R6
R7
R4
R9
R3
R2
R1
E39
C39
E29
C29
E20
C20
E10
C10
E38
C38
E28
C28
E19
C19
E9
C9
E37
C37
E27
C27
E18
C18
E8
C8
E36
C36
E26
C26
E17
C17
E7
C7
E35
C35
E25
C25
E16
E6
C6
E34
C34
R31
R32
E15
C15
E5
C5
E33
C33
E24
C24
E14
C14
E4
C4
E32
C32
E23
C23
E13
C13
E3
C3
E31
C31
E22
C22
E12
C12
E2
C2
E30
C30
E21
C21
E11
C11
E1
C1
C51
R24
R35
R34
C52
C53
C42
B
A
V U T S R P N M L K J H F E D C B A
V U T S R P N M L K J H F E D C B A

NOTES:

ETCH REV.	C
P.C. DESIGN DATA BASE REV.	C

SIGNATURES	DATE
DRN.	3-24-76
CHK'D.	3-24-76
ENG.	3/25/76
PROJ.ENG.	3/25/76
PROD.	3-25-76
SCALE 2/1	
SHT. 1 OF 3	
NEXT HIGHER ASSY. B-DD-M8656-0	

digital

TITLE
LK05 INTERFACE

SIZE	CODE	NUMBER	REV
D	UA	M8656-0-0	B

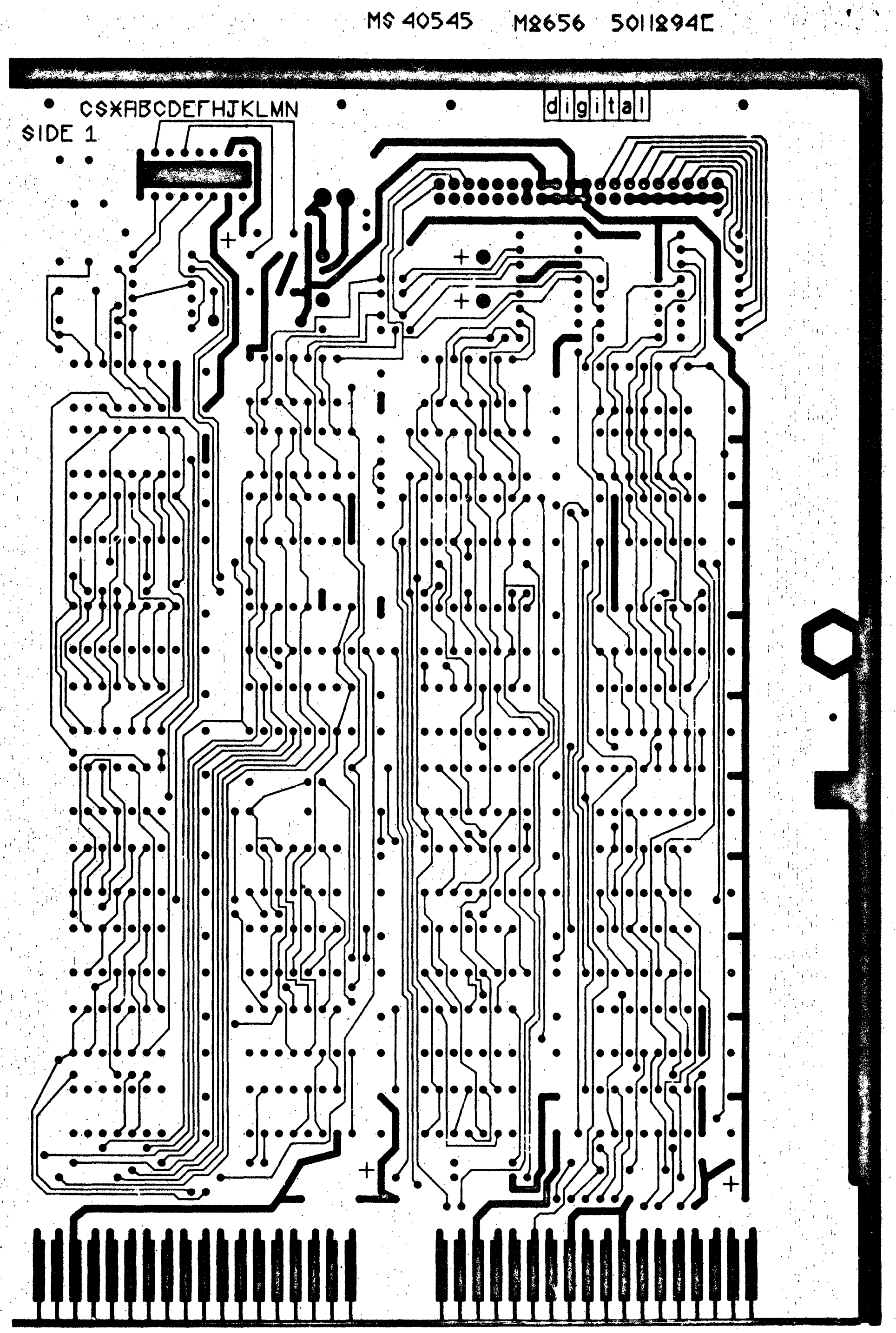
MS 40545
M8656
5011894C
CS*ABCDEFHJKLMN
SIDE 1
digital

REVISIONS		
CHK	CHANGE NO	REV

TITLE	SIZE	CODE	NUMBER	REV.
LK05 INTERFACE	D	UA	M8656-0-0	B
SCALE 2/1 SHEET 2 OF 3	DIST.			

D UA M8656-0-0 B

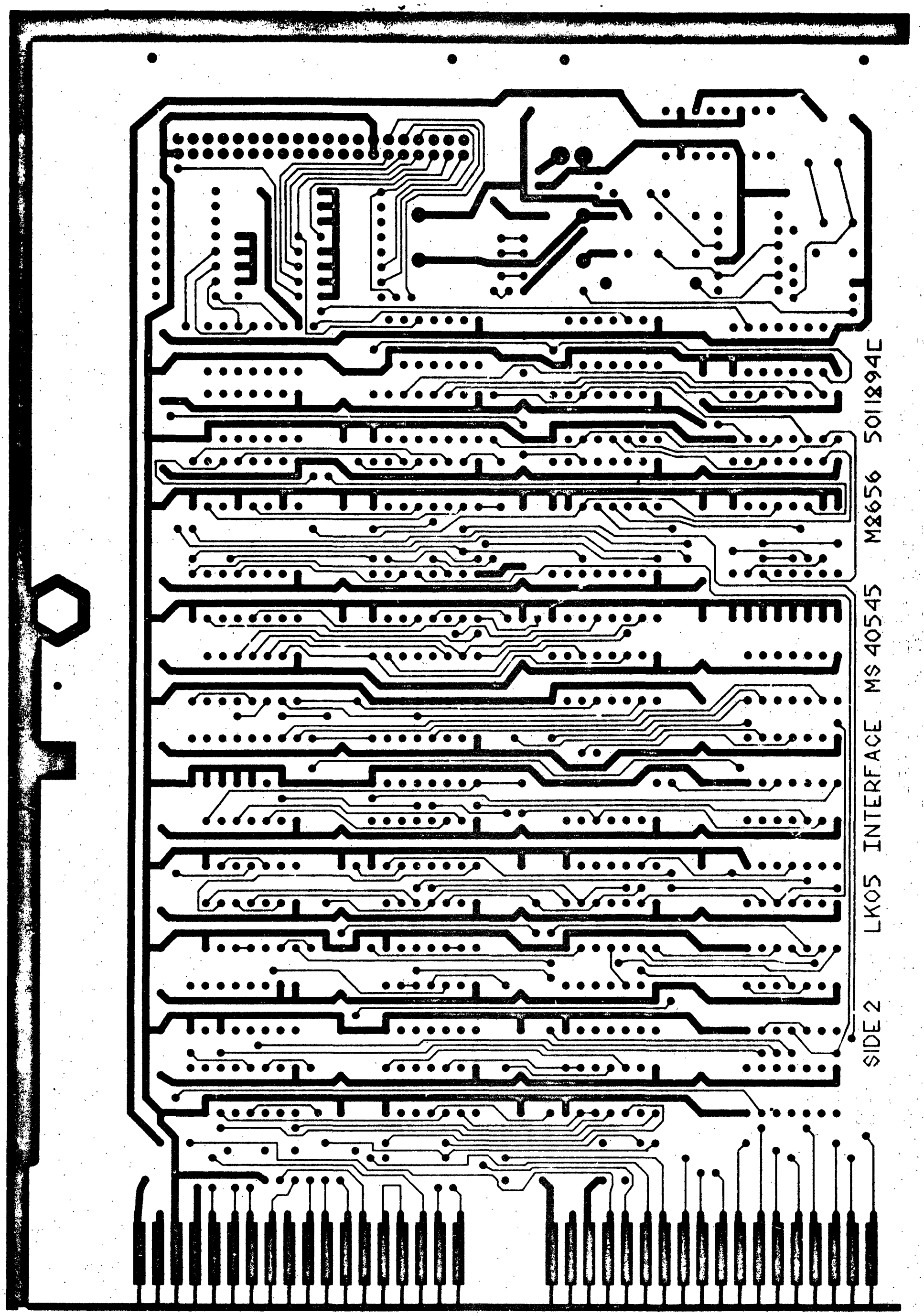
SIDE 2 LKO5 INTERFACE MS 40545 M8656 5011894C

TITLE	SIZE	CODE	NUMBER	REV.
LK05 INTERFACE	D	A	M3656-0-0	B
SCALE 2/1 SHEET 3 OF 3	DIST.			

DIGITAL EQUIPMENT CORPORATION
PARTS LIST

MADE BY J. WILLIAMS **DATE** 9-15-75	**CHECKED** T. SHETRAWSKI **DATE** 2-23-76	**SECTION** 1
ENG J. A. Williams **DATE** 3/25/76	**PROD** [illegible] **DATE** [illegible]-76	**ISSUED SECTION** 1

NOTES:

ITEM NO.	DRAWING NO.	PART NO.	DESCRIPTION	QUANTITY / VARIATION	REF DESIGNATION
1	D-CS-M8656-0-1		CIRCUIT SCHEMATIC		
2	K-CO-M8656-0-4		X-Y COORDINATE LOCATIONS		
3	D-AH-M8656-0-5		ASSY/DRILL HOLE LAYOUT		
4	B-MI-M8656-0-6		MODULE ECO HISTORY		
5		5011894	ETCHED CIRCUIT BOARD		
6		1000027	CAP 820 Pf	1	C51
7		1009678	CAP .047 Uf	1	C50
8		1001476	CAP 10 Uf	2	C54, C44
9		1001610-01	CAP .01 Uf	40	C55, C45, C1-C15, C17-C39
10		1001765	CAP .005 Uf	1	C52
11		1005306	CAP 6.8 Uf	3	C43, C42, C53
12		1010279	CAP .47 Uf	4	C46, C47, C48, C49
13		1100114	DIODE D664	4	D1, D2, D3, D5
14		1109502	DIODE IN4742	1	D4
15		129941-02	CONNECTOR	1	J1
16		1211164-04	SWITCH	3	E16, E36, E05
17		1300195	RESISTOR 33 OHMS 1/2W ± 5%	1	R28
18		1300229	RESISTOR 100 OHMS 1/4W ± 5%	10	R1-R9, R24
19		1300271	RESISTOR 220 OHMS 1/4W ±5%	4	R25, R26, R27, R31
20		1300309	RESISTOR 390 OHMS 1/4W ±5%	1	R32
21		1301317	RESISTOR 10 OHMS 1/4W ± 5%	1	R33

E.C.O. NO.

TITLE LK05 INTERFACE	**ASSY NO.** D-UA-M8656-0-0	**SIZE** B	**CODE** PL	**NUMBER** M8656-0-0	**REV.** B
	SHEET 1 **OF** 3	**INSERTION PARTS LIST DATA BASE REV** B			

EN-01140A-16-R276(325) DRB 125

DIGITAL EQUIPMENT CORPORATION
PARTS LIST

MADE BY J. WILLIAMS
DATE 9-15-75
ENG J. J. Williams
DATE 3/25/76
CHECKED T. SHETRAWSKI
DATE 2-23-76
PROD
DATE
SECTION 1
ISSUED SECTION 1

NOTES:

ITEM NO	DRAWING NO.	PART NO.	DESCRIPTION	QUANTITY / VARIATION	REF DESIGNATION
22		1301972	RESISTOR 270 OHMS 1/4W ± 5%	12	R10-R21
23		1301423	RESISTOR 6.8K 1/4W ± 5%	1	R23
24		1309143-12	RESISTOR 25K POT	1	R22
25		1300365	RESISTOR 1K 1/4W ± 5%	2	R34, R35
26		1305346	RESISTOR 27K 1/4W ± 5%	1	R30
27		1905547	IC 7474	4	E11, E33, E24, E32
28		1905575	IC 7400	1	E3
29		1905576	IC 7410	1	E13
30		1905578	IC 7430	1	E9
31		1909686	IC 7404	2	E34, E04
32		1909705	IC 8881	3	E21, E30, E31
33		1909929	IC 7417	2	E20, E29
34		1910155	IC 7408	3	E12, E22, E23
35		1910436	IC 74123	1	E39
36		1910655	IC 74157	2	E7, E8
37		1910656	IC 74155	1	E14
38		1911116	IC 8837	2	E1, E27
39		1911579	IC 8641	4	E17, E18, E25, E26
40		1911911	IC 74S124	1	E2
41		1912395	IC 8136	2	E37, E38
42		1912098	IC MH0026C	2	E41, E40

E.C.O. NO.

TITLE LKO5 INTERFACE
ASSY NO. D-UA-M8656-0-0
SHEET 2 OF 3
SIZE B
CODE PL
NUMBER M8656-0-0
REV. B
INSERTION PARTS LIST DATA BASE REV B

FN-01140A-16-R276(325) DRB 125

DIGITAL EQUIPMENT CORPORATION

PARTS LIST

MADE BY J. WILLIAMS **DATE** 9-15-75	**CHECKED** T. SHETRAWSKI **DATE** 2-23-76	**SECTION** 1
ENG J. R. Williams **DATE** 3/25/76	**PROD** **DATE** 3-25-76	**ISSUED SECTION** 1

NOTES:

ITEM NO.	DRAWING NO.	PART NO.	DESCRIPTION	QUANTITY / VARIATION	REF DESIGNATION
43		9008337-06	HANDLE FLIP CHIP, MAGENTA	1	
44		1212204-00	2 PIN CONN (MALE)	1	J2
45		1309143-05	RESISTOR 200 POT	1	R29
46		1300005-01	RESISTOR PACK 1K OHM	2	E06, E35
47		1300005-03	RESISTOR PACK 10K OHMS	1	E10
48		1910651	IC 74175	1	E15
49		1910652	IC 74174	2	E19, E28
50		9006732	HANDLE EYELETS	2	
51		1209941-03	LATCH LEFT	1	
52		1209941-04	LATCH RIGHT	1	

E.C.O. NO.

TITLE LK05 INTERFACE	**ASSY NO.** D-UA-M8656-0-0	**SIZE** B	**CODE** PL	**NUMBER** M8656-0-0	**REV.** B
	SHEET 3 **OF** 3	**INSERTION PARTS LIST DATA BASE REV** B			

N-0114)A-16-B276(32 DPF 125

48

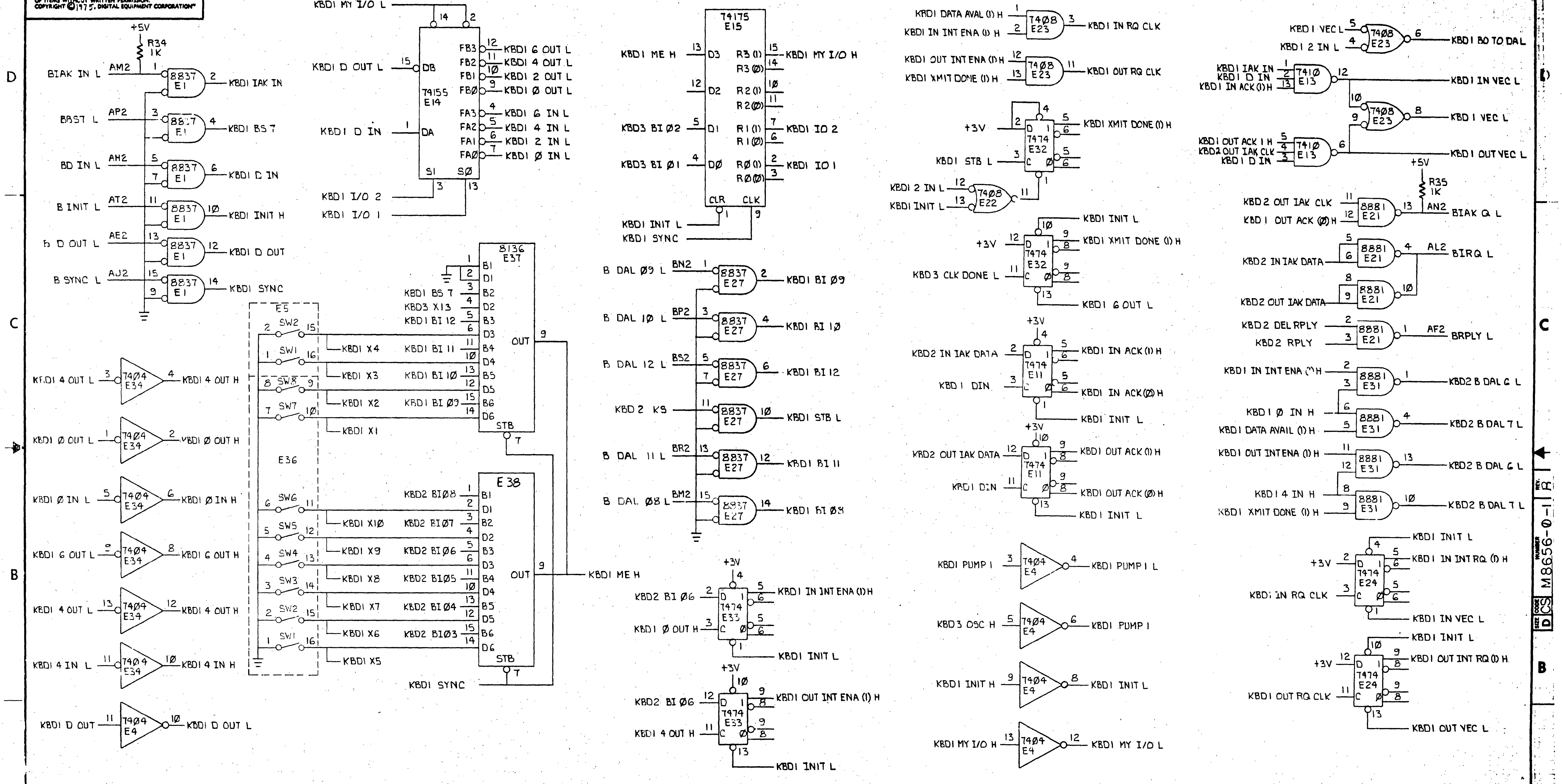
+5V
R34 1K
BIAK IN L
AM2
8837 E1
KBD1 IAK IN
BBS7 L
AP2
KBD1 BS 7
BD IN L
AH2
KBD1 D IN
B INIT L
AT2
KBD1 INIT H
B D OUT L
AE2
KBD1 D OUT
B SYNC L
AJ2
KBD1 SYNC
KBD1 MY I/O L
KBD1 D OUT L
DB
74155 E14
FB3
FB2
FB1
FB0
FA3
FA2
FA1
FA0
KBD1 6 OUT L
KBD1 4 OUT L
KBD1 2 OUT L
KBD1 0 OUT L
KBD1 6 IN L
KBD1 4 IN L
KBD1 2 IN L
KBD1 0 IN L
KBD1 D IN
DA
S1
S0
KBD1 I/O 2
KBD1 I/O 1
74175 E15
KBD1 ME H
D3
D2
D1
D0
R3 (1)
R3 (0)
R2 (1)
R2 (0)
R1 (1)
R1 (0)
R0 (1)
R0 (0)
KBD1 MY I/O H
KBD3 BI 02
KBD3 BI 01
KBD1 IO 2
KBD1 IO 1
CLR
CLK
KBD1 INIT L
KBD1 SYNC
8136 E37
B1 D1 B2 D2 B3 D3 B4 D4 B5 D5 B6 D6
OUT
STB
KBD1 BS 7
KBD3 X13
KBD1 BI 12
KBD1 BI 11
KBD1 BI 10
KBD1 BI 09
E5
SW2
SW1
SW8
SW7
KBD1 X4
KBD1 X3
KBD1 X2
KBD1 X1
E36
SW6
SW5
SW4
SW3
SW2
SW1
KBD1 X10
KBD1 X9
KBD1 X8
KBD1 X7
KBD1 X6
KBD1 X5
E38
KBD2 BI08
KBD2 BI07
KBD2 BI06
KBD2 BI05
KBD2 BI04
KBD2 BI03
KBD1 SYNC
KBD1 ME H
KBD1 4 OUT L
7404 E34
KBD1 4 OUT H
KBD1 0 OUT L
KBD1 0 OUT H
KBD1 0 IN L
KBD1 0 IN H
KBD1 6 OUT L
KBD1 6 OUT H
KBD1 4 OUT L
KBD1 4 OUT H
KBD1 4 IN L
KBD1 4 IN H
KBD1 D OUT
7404 E4
KBD1 D OUT L
B DAL 09 L
BN2
8837 E27
KBD1 BI 09
B DAL 10 L
BP2
KBD1 BI 10
B DAL 12 L
BS2
KBD1 BI 12
KBD2 KS
KBD1 STB L
B DAL 11 L
BR2
KBD1 BI 11
B DAL 08 L
BM2
KBD1 BI 08
+3V
KBD2 BI 06
7474 E33
KBD1 0 OUT H
KBD1 IN INT ENA (1) H
KBD1 INIT L
KBD2 BI 06
KBD1 4 OUT H
KBD1 OUT INT ENA (1) H
KBD1 INIT L
KBD1 DATA AVAL (1) H
KBD1 IN INT ENA (1) H
7408 E23
KBD1 IN RQ CLK
KBD1 OUT INT ENA (1) H
KBD1 XMIT DONE (1) H
KBD1 OUT RQ CLK
+3V
7474 E32
KBD1 STB L
KBD1 XMIT DONE (1) H
KBD1 2 IN L
KBD1 INIT L
7408 E22
KBD1 INIT L
KBD1 XMIT DONE (1) H
KBD3 CLK DONE L
KBD1 6 OUT L
KBD2 IN IAK DATA
7474 E11
KBD1 DIN
KBD1 IN ACK (1) H
KBD1 IN ACK (0) H
KBD1 INIT L
KBD2 OUT IAK DATA
KBD1 DIN
KBD1 OUT ACK (1) H
KBD1 OUT ACK (0) H
KBD1 INIT L
KBD1 PUMP 1
KBD1 PUMP 1 L
KBD3 OSC H
KBD1 PUMP 1
KBD1 INIT H
KBD1 INIT L
KBD1 MY I/O H
KBD1 MY I/O L
KBD1 VEC L
KBD1 2 IN L
7408 E23
KBD1 BO TO DAL
KBD1 IAK IN
KBD1 D IN
KBD1 IN ACK (1) H
7410 E13
KBD1 IN VEC L
KBD1 VEC L
KBD1 OUT ACK 1 H
KBD2 OUT IAK CLK
KBD1 D IN
KBD1 OUT VEC L
+5V
R35 1K
KBD2 OUT IAK CLK
KBD1 OUT ACK (0) H
8881 E21
AN2
BIAK O L
KBD2 IN IAK DATA
AL2
BIRQ L
KBD2 OUT IAK DATA
KBD2 DEL RPLY
KBD2 RPLY
AF2
BRPLY L
KBD1 IN INT ENA (1) H
8881 E31
KBD2 B DAL 6 L
KBD1 0 IN H
KBD1 DATA AVAIL (1) H
KBD2 B DAL 7 L
KBD1 OUT INT ENA (1) H
KBD2 B DAL 6 L
KBD1 4 IN H
KBD1 XMIT DONE (1) H
KBD2 B DAL 7 L
KBD1 INIT L
+3V
7474 E24
KBD1 IN RQ CLK
KBD1 IN INT RQ (1) H
KBD1 IN VEC L
KBD1 INIT L
KBD1 OUT RQ CLK
KBD1 OUT INT RQ (1) H
KBD1 OUT VEC L

REV.	
CHANGE NO.	
REVISIONS	
CHK	

DRN. Koppenol 1-30-76	FIRST USED ON			digital
CHK'D [illegible] 3/25/76	TITLE			
ENG. [illegible] 3/25/76	KBD INTERFACE			
PROJ. ENG. [illegible] 3/25/76				
PROD. [illegible] 3-25-76	(KBD I)			
NEXT HIGHER ASSY.				
D-UA-M8656-0-0	SIZE D	CODE CS	NUMBER M8656-0-1	REV. B
SCALE				
SHEET 1 OF 3	DIST.			

D CS M8656-0-1 R

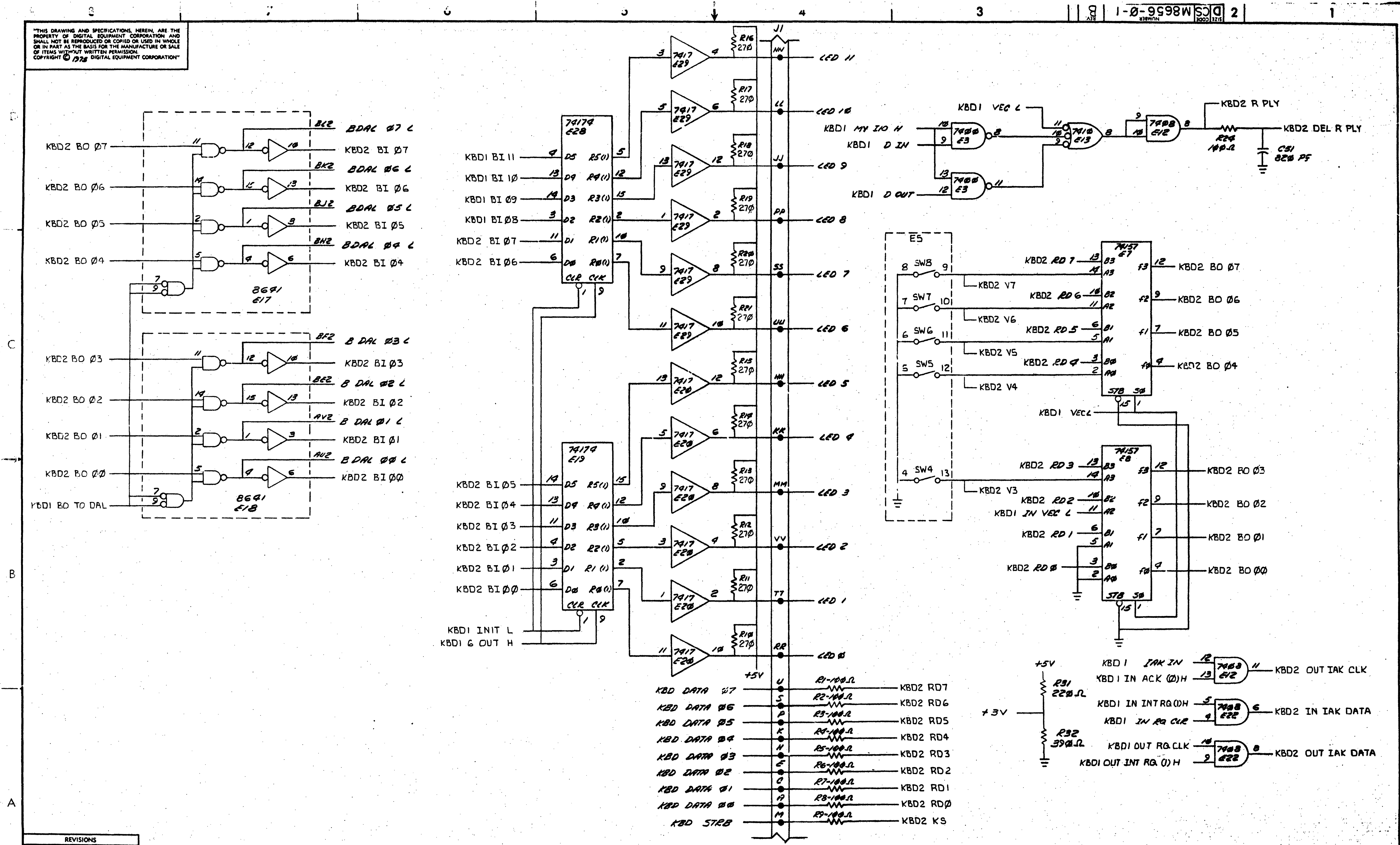
KBD2 BO 07
KBD2 BO 06
KBD2 BO 05
KBD2 BO 04
BDAL 07 L
KBD2 BI 07
BDAL 06 L
KBD2 BI 06
BDAL 05 L
KBD2 BI 05
BDAL 04 L
KBD2 BI 04
BL2
BK2
BJ2
BH2
8641
E17
KBD2 BO 03
KBD2 BO 02
KBD2 BO 01
KBD2 BO 00
KBD1 BO TO DAL
B DAL 03 L
KBD2 BI 03
B DAL 02 L
KBD2 BI 02
B DAL 01 L
KBD2 BI 01
B DAL 00 L
KBD2 BI 00
BF2
BE2
AV2
AU2
8641
E18
74174
E28
KBD1 BI 11
KBD1 BI 10
KBD1 BI 09
KBD1 BI 08
KBD2 BI 07
KBD2 BI 06
D5 R5(1)
D4 R4(1)
D3 R3(1)
D2 R2(1)
D1 R1(1)
D0 R0(1)
CLR CLK
74174
E13
KBD2 BI 05
KBD2 BI 04
KBD2 BI 03
KBD2 BI 02
KBD2 BI 01
KBD2 BI 00
KBD1 INIT L
KBD1 G OUT H
7417
E29
E20
R16 270
R17 270
R18 270
R19 270
R20 270
R21 270
R15 270
R14 270
R13 270
R12 270
R11 270
R10 270
J1
NN
LL
JJ
PP
SS
UU
HH
KK
MM
VV
TT
RR
LED 11
LED 10
LED 9
LED 8
LED 7
LED 6
LED 5
LED 4
LED 3
LED 2
LED 1
LED 0
+5V
KBD DATA 07
KBD DATA 06
KBD DATA 05
KBD DATA 04
KBD DATA 03
KBD DATA 02
KBD DATA 01
KBD DATA 00
KBD STRB
U
S
P
K
H
E
C
A
M
R1-100Ω
R2-100Ω
R3-100Ω
R4-100Ω
R5-100Ω
R6-100Ω
R7-100Ω
R8-100Ω
R9-100Ω
KBD2 RD7
KBD2 RD6
KBD2 RD5
KBD2 RD4
KBD2 RD3
KBD2 RD2
KBD2 RD1
KBD2 RD0
KBD2 KS
KBD1 VEC L
KBD1 MY I/O H
KBD1 D IN
KBD1 D OUT
7400
E3
7410
E13
7408
E12
KBD2 R PLY
KBD2 DEL R PLY
R24
100Ω
C51
820 PF
E5
SW8
SW7
SW6
SW5
SW4
KBD2 V7
KBD2 V6
KBD2 V5
KBD2 V4
KBD2 V3
74157
E7
KBD2 RD 7
KBD2 RD 6
KBD2 RD 5
KBD2 RD 4
B3 A3 B2 A2 B1 A1 B0 A0
F3 F2 F1 F0
STB S0
KBD2 BO 07
KBD2 BO 06
KBD2 BO 05
KBD2 BO 04
KBD1 VEC L
74157
E8
KBD2 RD 3
KBD2 RD 2
KBD1 IN VEC L
KBD2 RD 1
KBD2 RD 0
KBD2 BO 03
KBD2 BO 02
KBD2 BO 01
KBD2 BO 00
+5V
R31
220Ω
+3V
R32
390Ω
KBD1 IAK IN
KBD1 IN ACK (0)H
7408
E12
KBD2 OUT IAK CLK
KBD1 IN INTRQ(1)H
KBD1 IN RQ CLR
7408
E22
KBD2 IN IAK DATA
KBD1 OUT RQ CLK
KBD1 OUT INT RQ (1) H
KBD2 OUT IAK DATA

REVISIONS		
CHK	CHANGE NO.	REV.

TITLE
KBD INTERFACE (KBD2)
SIZE D CODE CS NUMBER M8656-0-1 REV. B
SCALE — SHEET 2 OF 3
DIST.

DEC FORM NO.

50

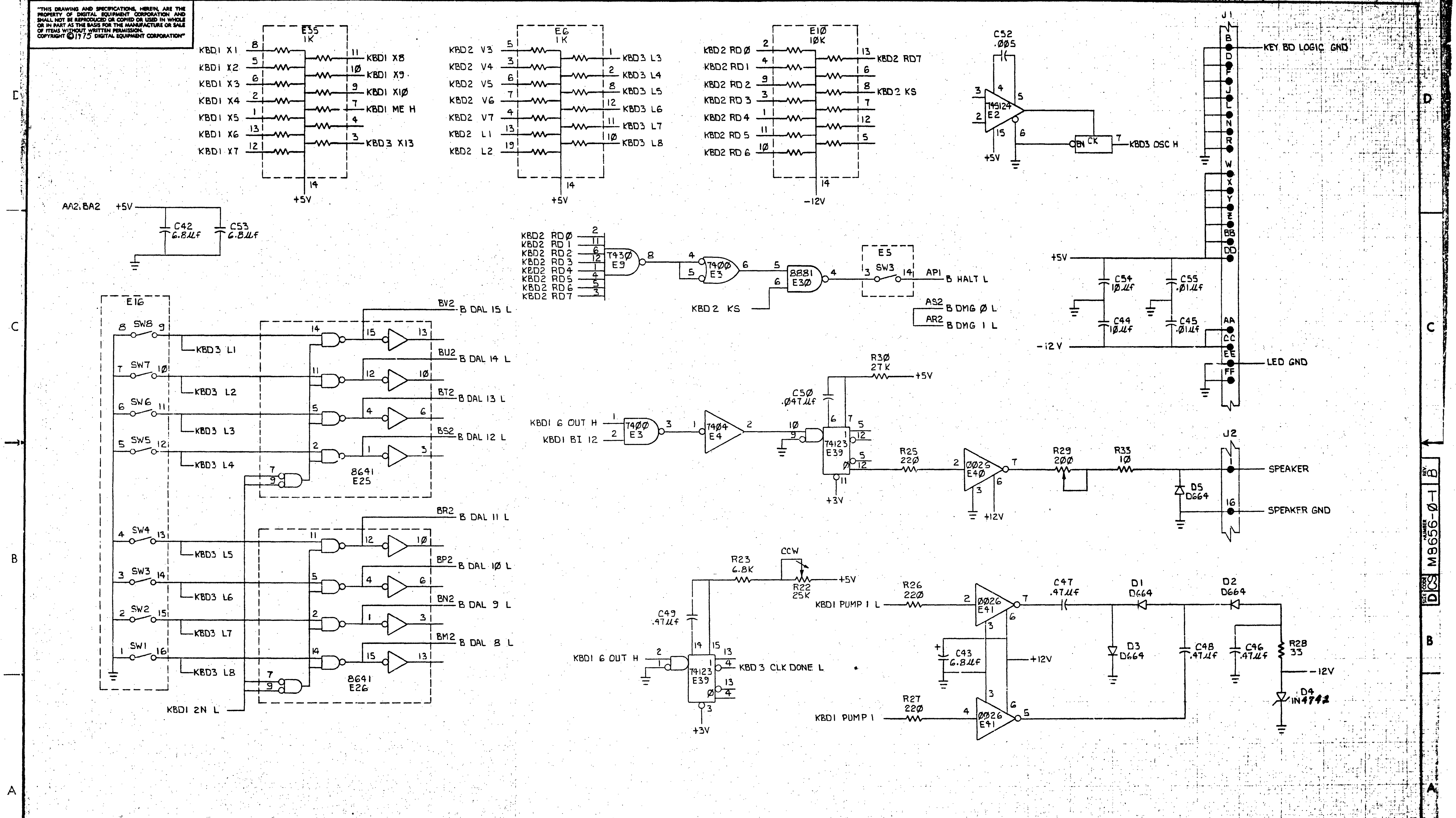
E35 1K
KBD1 X1
KBD1 X2
KBD1 X3
KBD1 X4
KBD1 X5
KBD1 X6
KBD1 X7
KBD1 X8
KBD1 X9
KBD1 X10
KBD1 ME H
KBD3 X13
+5V
E6 1K
KBD2 V3
KBD2 V4
KBD2 V5
KBD2 V6
KBD2 V7
KBD2 L1
KBD2 L2
KBD3 L3
KBD3 L4
KBD3 L5
KBD3 L6
KBD3 L7
KBD3 L8
E10 10K
KBD2 RD0
KBD2 RD1
KBD2 RD2
KBD2 RD3
KBD2 RD4
KBD2 RD5
KBD2 RD6
KBD2 RD7
KBD2 KS
-12V
C52 .005
74S124 E2
CK
KBD3 OSC H
J1
KEY BD LOGIC GND
AA2, BA2 +5V
C42 6.8µf
C53 6.8µf
7430 E9
7400 E3
8881 E30
E5 SW3
AP1 B HALT L
AS2 B DMG 0 L
AR2 B DMG 1 L
C54 10µf
C55 .01µf
C44 10µf
C45 .01µf
LED GND
E16
SW8
SW7
SW6
SW5
SW4
SW3
SW2
SW1
KBD3 L1
KBD3 L2
KBD3 L3
KBD3 L4
KBD3 L5
KBD3 L6
KBD3 L7
KBD3 L8
BV2 B DAL 15 L
BU2 B DAL 14 L
BT2 B DAL 13 L
BS2 B DAL 12 L
8641 E25
BR2 B DAL 11 L
BP2 B DAL 10 L
BN2 B DAL 9 L
BM2 B DAL 8 L
8641 E26
KBD1 2N L
KBD1 6 OUT H
KBD1 BI 12
7404 E4
R30 27K +5V
C50 .047µf
74123 E39
+3V
R25 220
0026 E40
+12V
R29 200
R33 10
D5 D664
J2
SPEAKER
SPEAKER GND
R23 6.8K
CCW
R22 25K
C49 .47µf
KBD3 CLK DONE L
R26 220
KBD1 PUMP 1 L
0026 E41
C47 .47µf
D1 D664
D2 D664
C43 6.8µf
D3 D664
C48 .47µf
C46 .47µf
R28 33
D4 IN4742
R27 220
KBD1 PUMP 1

REVISIONS		
CHK	CHANGE NO.	REV.

TITLE KBD INTERFACE (KBD3)
SIZE D CODE CS NUMBER M8656-0-1 REV. B
SCALE —/— SHEET 3 OF 3 DIST.

51

This information is proprietary information of DEC. This information shall not be disclosed to persons outside the employ of DEC, except by DEC personnel so authorized by DEC, and only for use by such other persons in the design, production or manufacture of products for DEC.
Copyright © 1976 Digital Equipment Corporation.

DIGITAL EQUIPMENT CORPORATION
MAYNARD, MASSACHUSETTS

ENGINEERING SPECIFICATION DATE 2/27/76

TITLE M8656 LK05 TO LSI-11 BUS INTERFACE

REVISIONS

REV	DESCRIPTION	CHG NO	ORIG	DATE	APPD BY	DATE

ENG	APPD	SIZE	CODE	NUMBER	REV
Jack T. Williams	Jack T. Williams	A	SP	M8656-0-8	

DEC 16-(392)-1079A-R873
DRA 107A

SHEET 1 OF 5

ENGINEERING SPECIFICATION digital CONTINUATION SHEET

TITLE M8656 LK05 to LSI-11 Bus Interface

1.1 The M8656 is an interface between the LK05 keyboard and the LSI-11 Bus.

1.2 The M8656 receives, from the LK05, 8 bit parallel data indicating which key has been struck,. 8 additional bits are jumper selectable and serve as a hardware ID code. It transmits to the LK05, 12 bits of parallel data, lighting associated Led indicators. A 13th bit is used to cause an audible click.

1.3 Power Requirements

+5V at 1.6 A Max./1.1A Typ.
+12V at 0.3 A Max./0.2A Typ.

2.1 The module has switch selectable vector and address.

The volume of the click pulse, fed to an external speaker, is adjusted via a variable resistor.

The time between clicks is also adjustable via a variable resistor.

A jumper enables the insertion of Halt on the LSI-11 bus. This level is asserted when an 8 bit delete 377/8 is transmitted by the keyboard.

An 8 bit switch selectable ID code is available as the high byte of the Keyboard Data Buffer, the low byte being the keyboard data.

3.0 PROGRAMMING

3.1 All software control of the M8656 is via 4 device addresses. The addresses are consecutive and start at 0. Bits 3-12 are switch selectable.

SIZE	CODE	NUMBER	REV
A	SP	M8656-0-8	

DEC FORM NO DEC 16-(381)-1022-N370
DRA 108

SHEET 2 OF 5

ENGINEERING SPECIFICATION digital CONTINUATION SHEET

TITLE M8656 LK05 to LSI-11 Bus Interface

3.2 Keyboard Status Register KBSR

Bit 15-8	Not Used
Bit 7	Character Available - Read Only - set to 1 by keyboard strobe indicating a character has been transmitted from the keyboard. Cleared by addressing KBUF or INIT.
Bit 6	Keyboard Interrupt ENA - Read/Write - cleared by INIT. If bit 6 is set and bit 7 is set, an interrupt occurs.
Bit 5-0	Not Used

3.3 Keyboard Data Buffer KBUF

Bit 15-8	Switch Setable ID number
Bit 7-0	Keyboard Data bits.

3.4 Led Status Register LCSR

Bit 15-8	Not Used
Bit 7	Led Ready - Read Only - Set by INIT. Cleared when LBUF is loaded, set after adjustable time delay.
Bit 6	Interrupt Enable. If bit 6 is set and bit 7 gets set an interrupt occurs.
Bit 5-0	Not Used

3.5 Led Data Buffer LBUF

Bit 15-13	Not Used
Bit 12	Causes an audible click when set to a 1.
Bit 11-0	Causes individual leds to light.

3.6 Interrupts - Two interrupts, one for keyboard and one for Leds. They operate independently except the keyboard has priority.

SIZE	CODE	NUMBER	REV
A	SP	M8656-0-8	

DEC FORM NO DEC 16-(381)-1022-N370
DRA 108

SHEET 3 OF 5

ENGINEERING SPECIFICATION digital CONTINUATION SHEET

TITLE M8656 LK05 to LSI-11 Bus Interface

3.7 Address and Vector Assignments

The address and vector assignments may be set to the standard console, ie:

Address	Vector
177560	
62	60/64
64	
66	

in which case it will interface with the ODT in the LSI-11. However, addresses starting at 76XXX0 and all vectors up to 374 are possible.

3.8 Halt Character

When enabled by a jumper, if 377/8 is transmitted from the keyboard the Halt line on the LSI-11 bus is asserted for 1 MS. This forces the processor into ODT.

4.0 40 Pin Pinning

A	- Keyboard Data	0
C		1
E		2
H		3
K		4
M		Strobe
P		5
S		6
U	- Keyboard Data	7
X,W,Y	+5	
Z,BB,DD	+5	
AA	-12	
CC	-12	
HH	Led 5	
JJ	Led 9	
KK	Led 4	
JJ	Led 9	
KK	Led 4	
LL	Led 10	
MM	Led 3	
NN	Led 11	
PP	Led 8	
RR	Led 0	

SS	Led 7
TT	Led 1
UU	Led 6
VV	Led 2

All other pins are ground.

SIZE	CODE	NUMBER	REV
A	SP	M8656-0-8	

DEC FORM NO DEC 16-(381)-1022-N370
DRA 108

SHEET 4 OF 5

5.0 Finger Pinning

+5	AA2 BA2	BIRQ L	AL2
+12	AD2 BD2	BRPLY L	AF2
BBS7	AP2		
BDAL 0 L	AU2		
BDAL 1 L	AV2	BSYNC L	AJ2
BDAL 2 L	BE2		
BDAL 3 L	BF2	GND	AC2
BDAL 4 L	BH2	GND	AT1
BDAL 5 L	BJ2		
BDAL 6 L	BK2		
BDAL 7 L	BL2	GND	BC2
BDAL 8 L	BM2	BDC OK H	BA1
BDAL 9 L	BN2		
BDAL 10 L	BP2		BT1
BDAL 11 L	BR2	UNUSED	AK1
BDAL 12 L	BS2		AL1
BDAL 13 L	BT2	UNUSED	BK1
BDAL 14 L	BU2		BL1
BDAL 15 L	BV2	UNUSED	BC1
BDIN L	AH2	UNUSED	BD1
BDOUT L	AE2	UNUSED	BE1
BHALT L	AP1	UNUSED	BF1
BIAK I L*	AM2	UNUSED	BH1
BIAK O L*	AN2		
BINIT L	AT2		
BDMGIL ⌉	AR2		
BDMGOL ⌋	AS2		

*These signals are not bussed - they are daisy chained.

[These signals are connected together on the M8656.

THIS DRAWING AND SPECIFICATIONS, HEREIN, ARE THE PROPERTY OF DIGITAL EQUIPMENT CORPORATION AND SHALL NOT BE REPRODUCED OR COPIED OR USED IN WHOLE OR IN PART AS THE BASIS FOR THE MANUFACTURE OR SALE OF ITEMS WITHOUT WRITTEN PERMISSION.
COPYRIGHT © DIGITAL EQUIPMENT CORPORATION

REWORK INSTRUCTIONS:

ECO #1

WIRE ADDS SIDE 1:

1-1. AT FEED-THRU ABOVE E24-13 TO PIN E23-8

1-2. E23-8 TO E23-5

1-3. AT FEED-THRU ABOVE AND CONNECTED TO E48-12 TO E23-6

1-4. E49-11 TO E23-9

1-5. E23-10 TO E23-4

1-6. E23-4 TO FINGER AK2 ON SIDE 2 (SEE 3-7).

1-7. TO ACCOMPLISH NOTE 3-6 A HOLE IS NEEDED TO PASS THE WIRE FROM E23-4 ONTO SIDE 2. THIS IS TO BE DONE BY REMOVING THE SOLDER AT THE FEEDHOLE ABOVE FINGER AL1 (MAKING SURE THE HOLE IS STILL PLATED). PASS THE INSULATED WIRE THROUGH THE CREATED HOLE AND SOLDER TO PIN AK2 (SEE SHEET 3). THE LENGTH OF WIRE ON SIDE 2 IS NOT TO EXCEED 1/2".
MAKE CERTAIN THE SIGNAL CARRIED BY THE WIRE IS NOT SHORTED TO THE SIGNAL CARRIED BY THE FEED THRU.

COMPONENT SIDE VIEW

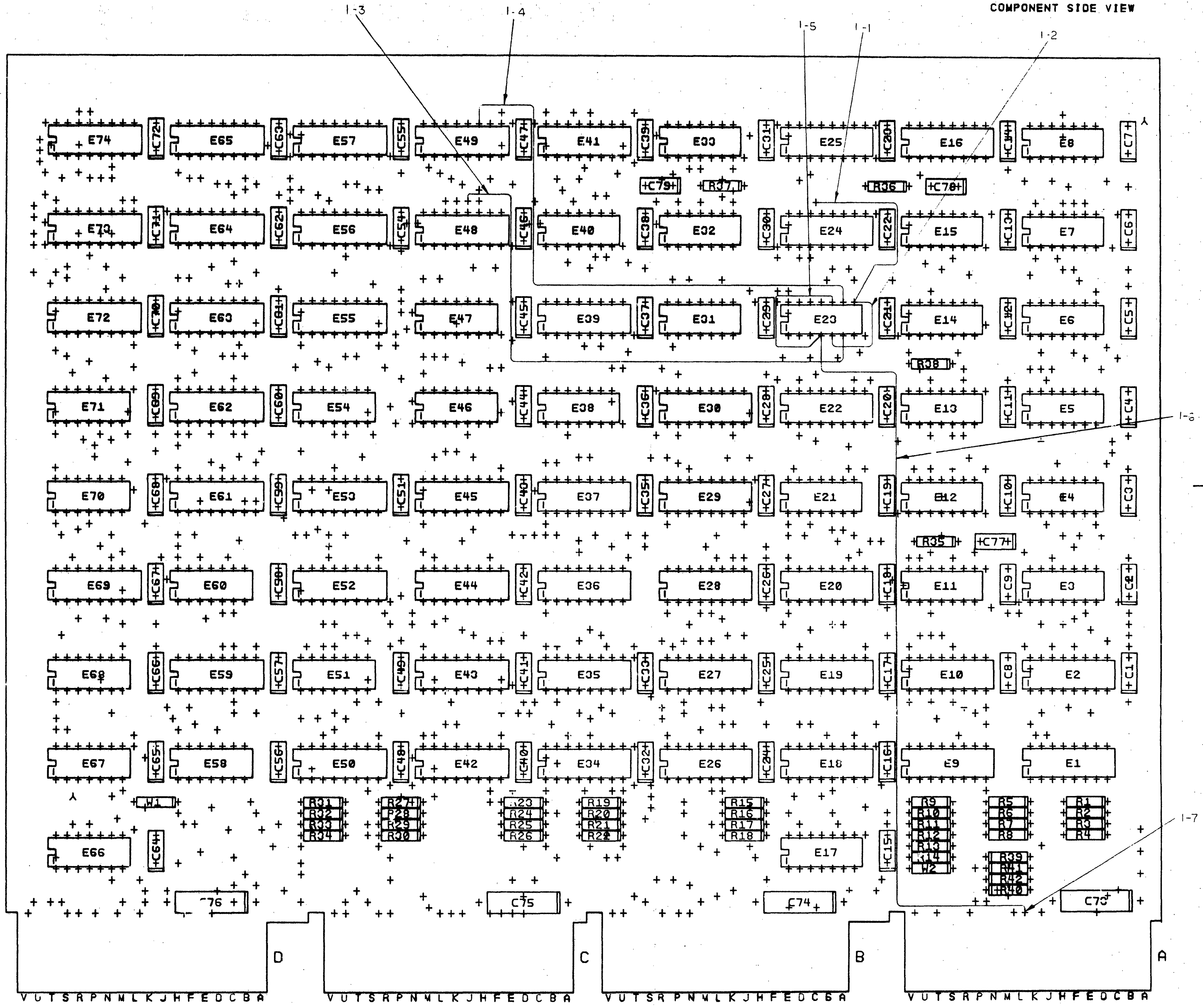
1-3
1-4
1-5
1-1
1-2
1-6
1-7
E74
E65
E57
E49
E41
E33
E25
E16
E8
E73
E64
E56
E48
E40
E32
E24
E15
E7
E72
E63
E55
E47
E39
E31
E23
E14
E6
E71
E62
E54
E46
E38
E30
E22
E13
E5
E70
E61
E53
E45
E37
E29
E21
E12
E4
E69
E60
E52
E44
E36
E28
E20
E11
E3
E68
E59
E51
E43
E35
E27
E19
E10
E2
E67
E58
E50
E42
E34
E26
E18
E9
E1
E66
E17
C76
C75
C74
C73
D
C
B
A
V U T S R P N M L K J H F E D C B A

D UA M8657-YA- 0 E

NOTES:

CHK	CHANGE NO	REV
	REVISED & REDRAWN	D
	M8657-YA-1 D. Chasson 5 August 77 J. WILLIAMS	E

ETCH REV. C
P.C. DESIGN DATA BASE REV. D

SIGNATURES	DATE
DRN. J. RICHARD	7JAN77
CHK D	1-12-77
ENG. J. F. Williams	1-12-77
PROJ. ENG. J. F. Williams	1-12-77
PROD.	

digital

TITLE
VT 71 CONTROL

SIZE	CODE	NUMBER	REV
D	UA	M8657-YA-0	E

SCALE 2/1
SHT. 1 OF 3
NEXT HIGHER SSY. D-DD-M8657-YA-6

1 MS#

"THIS DRAWING AND SPECIFICATIONS, HEREIN, ARE THE PROPERTY OF DIGITAL EQUIPMENT CORPORATION AND SHALL NOT BE REPRODUCED OR COPIED OR USED IN WHOLE OR IN PART AS THE BASIS FOR THE MANUFACTURE OR SALE OF ITEMS WITHOUT WRITTEN PERMISSION.
COPYRIGHT © , DIGITAL EQUIPMENT CORPORATION"

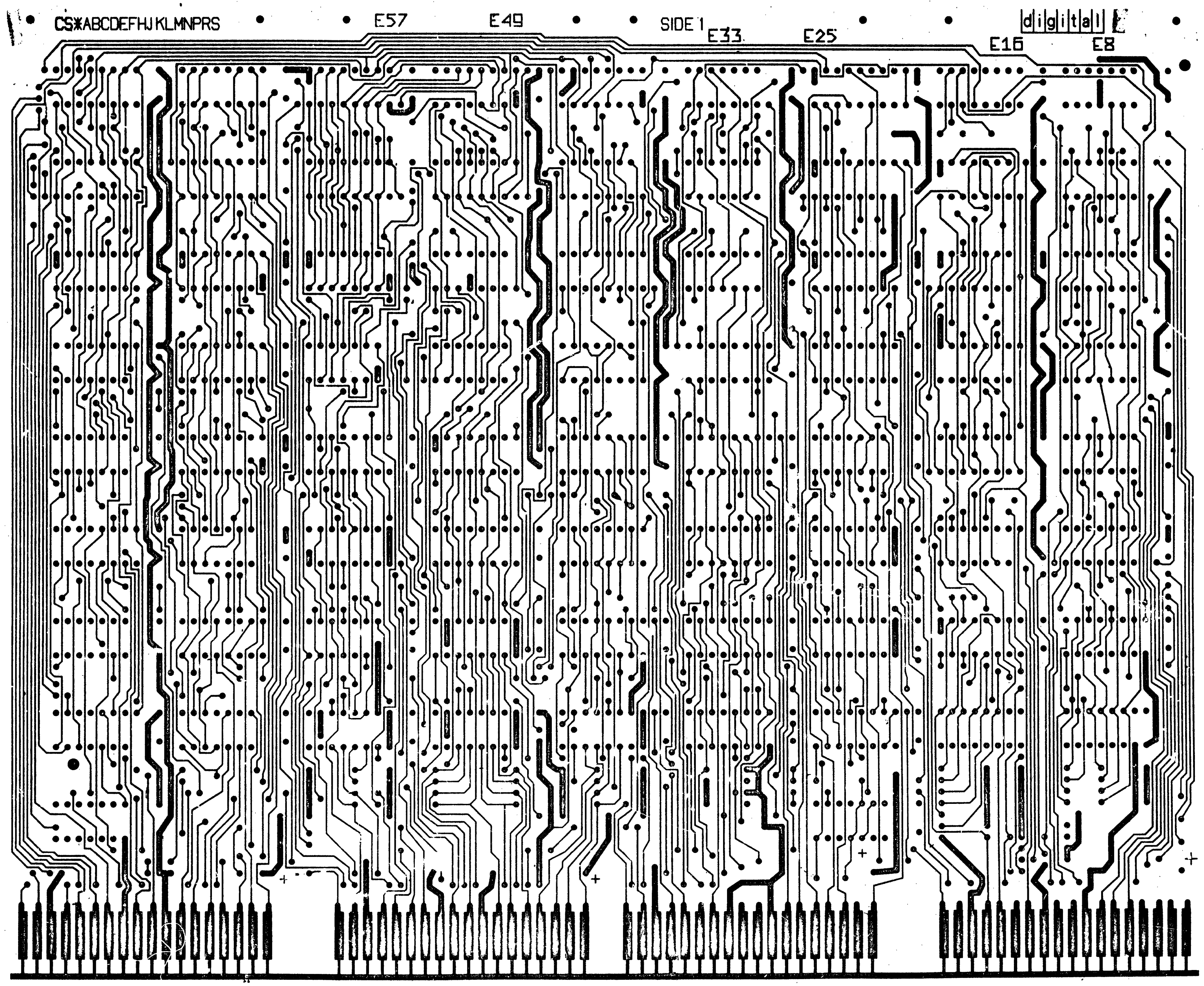
CS*ABCDEFHJKLMNPRS
E57
E49
SIDE 1
E33
E25
E16
E8
digital

REVISIONS		
CHK	CHANGE NO.	REV.

TITLE		SIZE	CODE	NUMBER	REV.
VT 21 CONTROL		D	UA	M8657-YA-0	E
SCALE 2/1	SHEET 2 OF 3	DIST.			

D UA M8657-YA-0 E

"THIS DRAWING AND SPECIFICATIONS, HEREIN, ARE THE PROPERTY OF DIGITAL EQUIPMENT CORPORATION AND SHALL NOT BE REPRODUCED OR COPIED OR USED IN WHOLE OR IN PART AS THE BASIS FOR THE MANUFACTURE OR SALE OF ITEMS WITHOUT WRITTEN PERMISSION.
COPYRIGHT © , DIGITAL EQUIPMENT CORPORATION"

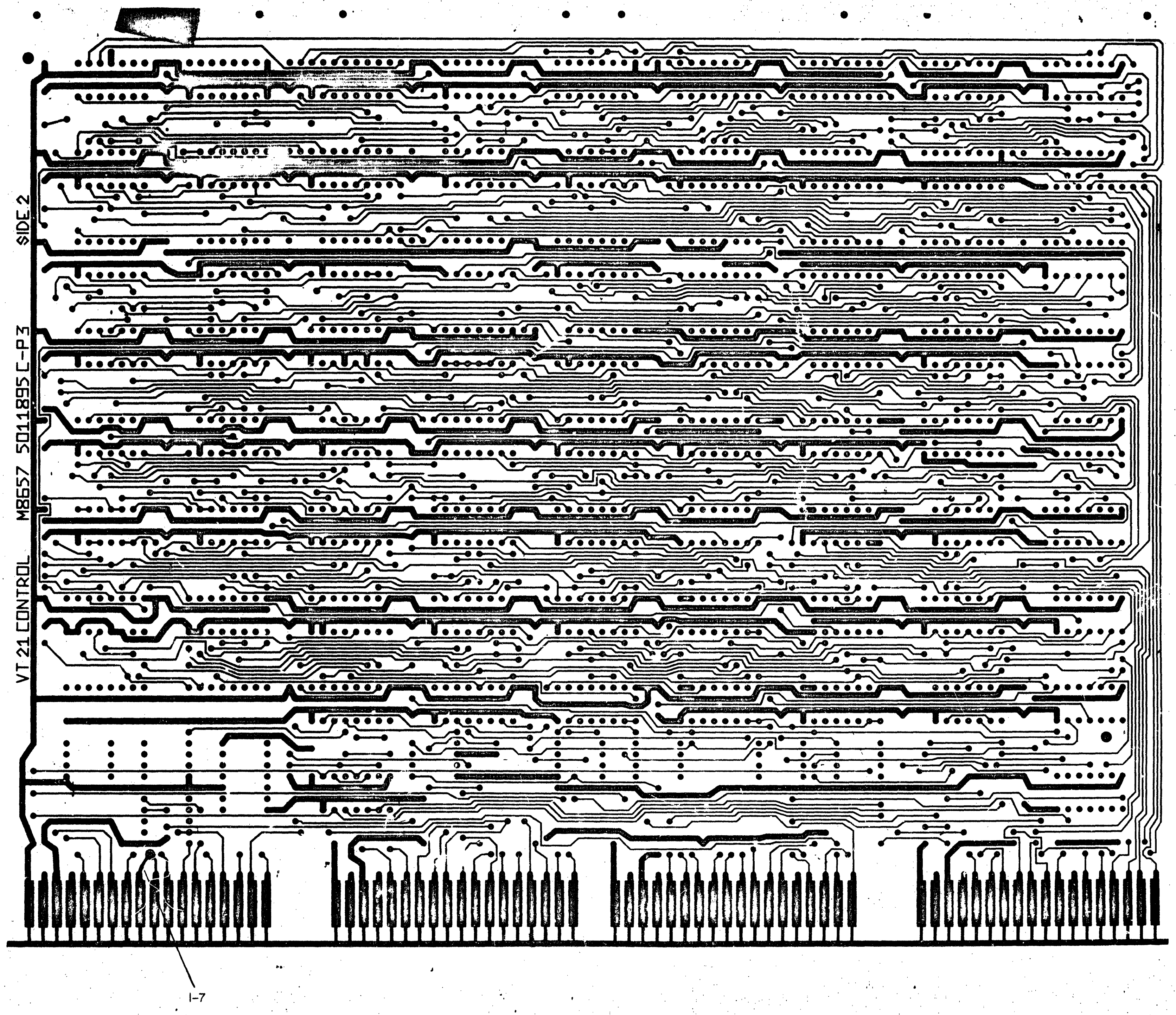

REVISIONS		
CHK	CHANGE NO.	REV.

TITLE	SIZE	CODE	NUMBER	REV.
VT 21 CONTROL	D	UA	M8657-YA-0	E
SCALE 2/1	SHEET 3 OF 3	DIST.		

D UA M8657-YA-0 E

DIGITAL EQUIPMENT CORPORATION

PARTS LIST

MADE BY K. GLEEZEN DATE 2/19/76	CHECKED K. GLEEZEN DATE	SECTION 1
ENG DATE 3/25/76	PROD DATE 3-25-76	ISSUED SECTION 1

QUANTITY / VARIATION

NOTES:

ITEM NO.	DRAWING NO.	PART NO.	DESCRIPTION	M8657-YA-0												REF. DESIGNATION
1		5011895	ETCHED CIRCUIT BD.	1												
2		1000042	CAP1000PF	3												C77, C78, C79.
3		1001610-00	CAP .01UF 50V	68												C1-C33, C35-C49, C51, C54-C72
4		1005306	CAP 6.8 UF 35V	4												C73-C76
5		1300229	RES. 100 1/4W 5%	2												R35, R37
6		1300271	RES. 220 1/4W 5%	2												R16, R18
7		1300309	RES. 390 1/4W 5%	2												R15, R17
8		1300365	RES. 1K 1/4W 5%	35												R1-R14, R38, R19-R34, R39-R42
9		1302394	RES. 30K 1/4W 5%	1												R36
10																
11		1905547	IC DEC 7474	5												E4, E5, E13, E14, E58
12		1905587	IC DEC 7473	2												E8, E47
13		1909004	IC DEC 7402	2												E15, E31
14		1909056	IC DEC 74H00	1												E70
15		1909057	IC DEC 74H10	1												E33
16		1909267	IC DEC 74H11	4												E6, E12, E40, E71
17		1909667	IC DEC 74H74	1												E38
18		1909686	IC DEC 7404	3												E32, E54, E60
19		1909705	IC DEC 8881	5												E3, E11, E17, E21, E23
20		1909713	IC DEC 8815	1												E68
21		1909931	IC DEC 74H04	1												E67

E.C.O. NO.
M8657-1
M8657 2
M8657-3
M8657-YA

TITLE VT71 CONTROL SECTION	ASSY NO. D-UA-M8657-YA-0	SIZE B	CODE PL	NUMBER M8657-YA-0	REV E	
	SHEET 1 OF 3	DIST				

EN-01140-16-N1075-(3 DRB 124

DIGITAL EQUIPMENT CORPORATION
PARTS LIST

MADE BY K. GLEEZEN **DATE** 2/19/76	**CHECKED** K. GLEEZEN **DATE**	**SECTION** 1
ENG J. J. **DATE** 3/25/76	**PROD** **DATE** 3-25-76	**ISSUED SECTION** 1

NOTES:

ITEM NO.	DRAWING NO.	PART NO.	DESCRIPTION	QUANTITY / VARIATION M8657-YA-0	REF. DESIGNATION
22		1909936	IC DEC 74151	4	E25, E72, E73, E74
23		1910155	IC DEC 7408	1	E51
24		1910436	IC DEC 74123	1	E16
25		1910650	IC DEC 74161	11	E22, E28-E30, E36, E37, E44, E45, E48, E49, E53
26		1910651	IC DEC 74175	4	E24, E39, E59, E61
27		1910652	IC DEC 74174	1	E69
28		1910655	IC DEC 74157	1	E41
29		1910656	IC DEC 74155	4	E62-E65
30		1910878	IC DEC 7427	1	E7
31		1911116	IC DEC 8837	2	E19, E20
32		1911579	IC DEC 8641	4	E18, E26, E27, E35
33		1911330	IC DEC 74173	5	E34, E42, E43, E50, E52
34		1905635	IC DEC 74H20	1	E46
35		1912395	IC DEC 8136	2	E2, E10
36		23407A9	IC DEC 6306	1	E57
37		23400A9	IC DEC 6306	1	E56
38		23405A9	IC DEC 6306	1	E55
39		1811660-03	CRYSTAL OSC K1100A	1	E66
40		9009185	JUMPER INSULATED	2	W1, W2
41		9008337-06	HANDLE FLIP CHIP	4	

E.C.O. NO.

TITLE VT71 CONTROL SECTION	**ASSY NO.** D-UA-M8657-YA-0 **SHEET** 2 **OF** 3	**SIZE** B	**CODE** PL	**NUMBER** M8657-YA-0	**REV.** E

EN-01140-16-N1075-(325) DRB 124

DIGITAL EQUIPMENT CORPORATION

PARTS LIST

MADE BY K. GLEEZEN **DATE** 2/19/76	**CHECKED** K. GLEEZEN **DATE**	**SECTION** 1
ENG **DATE** 3/25/76	**PROD** **DATE** 3-25-76	**ISSUED SECTION** 1

NOTES:

ITEM NO.	DRAWING NO.	PART NO.	DESCRIPTION	QUANTITY/VARIATION M8657-YA-0	REF. DESIGNATION
42		9006732	EYELET GS4-7	8	
43		1211164-04	SWITCH D.I.P.	2	E1, E9

E.C.O. NO.

TITLE VT71 CONTROL SECTION	**ASSY NO.** D-UA-M8657-YA-0	**SIZE** B	**CODE** PL	**NUMBER** M8657-YA-0	**REV.** E
	SHEET 3 **OF** 3	**DIST**			

EN-01140-16-N1075-(325) DRB 124

"THIS DRAWING AND SPECIFICATIONS, HEREIN, ARE THE PROPERTY OF DIGITAL EQUIPMENT CORPORATION AND SHALL NOT BE REPRODUCED OR COPIED OR USED IN WHOLE OR IN PART AS THE BASIS FOR THE MANUFACTURE OR SALE OF ITEMS WITHOUT WRITTEN PERMISSION.

NOTES:

1. UNLESS OTHERWISE INDICATED ALL SIG'S. ARE TRUE HIGH.

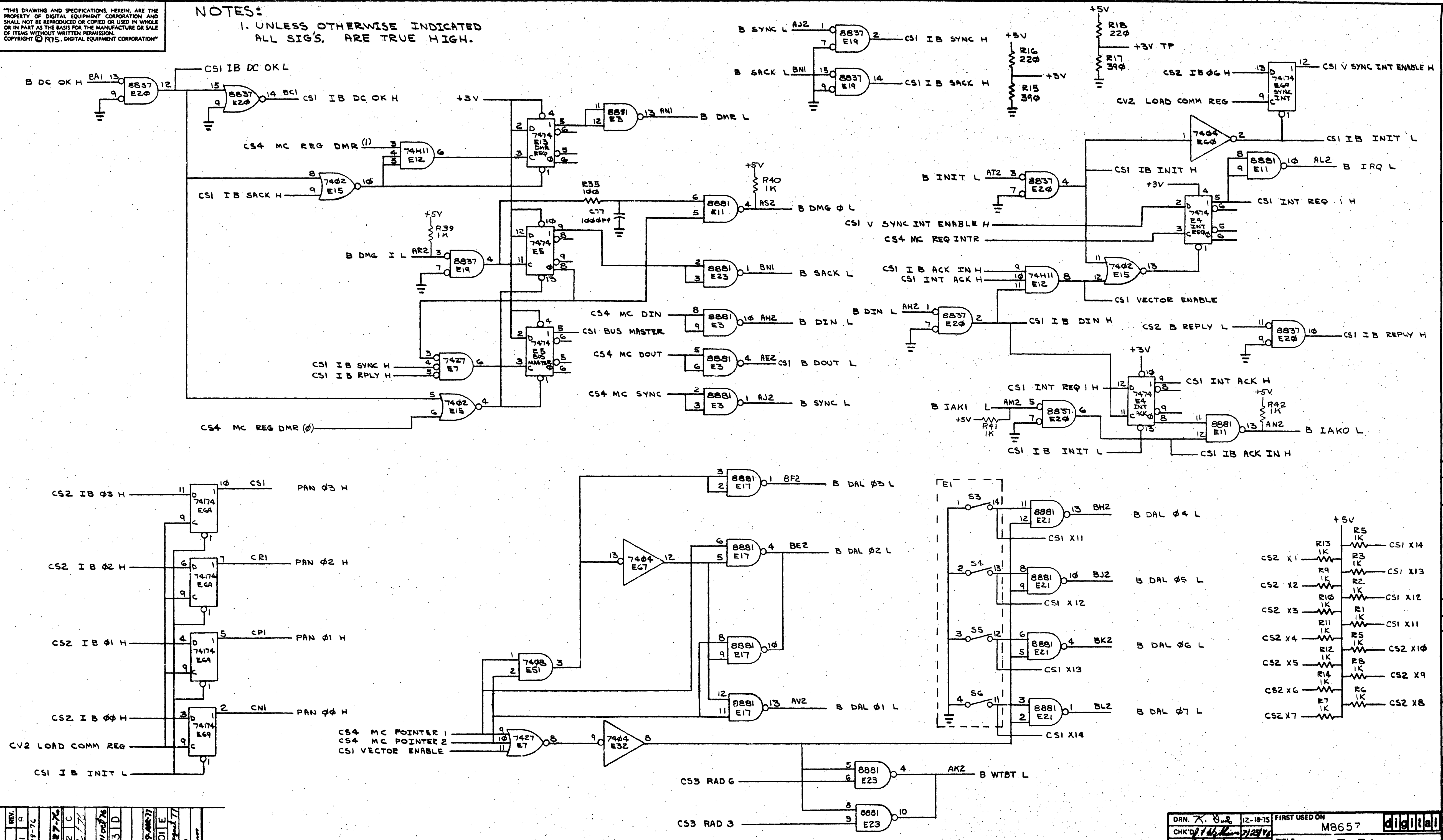

B DC OK H
BA1
8837 E20
CS1 IB DC OK L
CS1 IB DC OK H
BC1
+3V
7474 E13 DMR REG
8881 E3
AN1
B DMR L
CS4 MC REG DMR (1)
74H11 E12
7402 E15
CS1 IB SACK H
+5V
R35 100
C77 1000PF
R40 1K
8881 E11
AS2
B DMG Φ L
R39 1K
B DMG I L
AR2
8837 E19
7474 E5
8881 E23
BN1
B SACK L
CS4 MC DIN
8881 E3
AH2
B DIN L
CS1 BUS MASTER
7474 E5 BUS MASTER
CS4 MC DOUT
AE2
CS1 B DOUT L
CS1 IB SYNC H
CS1 IB RPLY H
7427 E7
CS4 MC SYNC
AJ2
B SYNC L
7402 E15
CS4 MC REG DMR (0)
B SYNC L
AJ2
8837 E19
CS1 IB SYNC H
B SACK L
BN1
CS1 IB SACK H
+5V
R16 220
R15 390
+3V
R18 220
+3V TP
R17 390
CS2 IB Φ6 H
74174 E69 SYNC INT
CS1 V SYNC INT ENABLE H
CV2 LOAD COMM REG
7404 E69
CS1 IB INIT L
8881 E11
AL2
B IRQ L
B INIT L
AT2
8837 E20
CS1 IB INIT H
7474 E4 INT REQ
CS1 INT REQ H
CS1 V SYNC INT ENABLE H
CS4 MC REQ INTR
CS1 IB ACK IN H
CS1 INT ACK H
74H11 E12
7402 E15
CS1 VECTOR ENABLE
B DIN L
AH2
8837 E20
CS1 IB DIN H
CS2 B REPLY L
8837 E20
CS1 IB REPLY H
CS1 INT REQ H
7474 E4 INT ACK
CS1 INT ACK H
R42 1K
B IAKI L
AM2
8837 E20
R41 1K
8881 E11
AN2
B IAKO L
CS1 IB INIT L
CS1 IB ACK IN H
CS2 IB Φ3 H
74174 E69
CS1
PAN Φ3 H
CS2 IB Φ2 H
CR1
PAN Φ2 H
CS2 IB Φ1 H
CP1
PAN Φ1 H
CS2 IB ΦΦ H
CN1
PAN ΦΦ H
CV2 LOAD COMM REG
CS1 IB INIT L
8881 E17
BF2
B DAL Φ3 L
7404 E67
BE2
B DAL Φ2 L
7408 E51
AV2
B DAL Φ1 L
CS4 MC POINTER 1
CS4 MC POINTER 2
CS1 VECTOR ENABLE
7427 E7
7404 E32
CS3 RAD G
8881 E23
AK2
B WTBT L
CS3 RAD 3
E1
S3
S4
S5
S6
8881 E21
BH2
B DAL Φ4 L
CS1 X11
BJ2
B DAL Φ5 L
CS1 X12
BK2
B DAL Φ6 L
CS1 X13
BL2
B DAL Φ7 L
CS1 X14
+5V
CS2 X1
CS2 X2
CS2 X3
CS2 X4
CS2 X5
CS2 X6
CS2 X7
R13 1K
R9 1K
R10 1K
R11 1K
R12 1K
R14 1K
R7 1K
R5 1K
R3 1K
R2 1K
R1 1K
R5 1K
R8 1K
R6 1K
CS1 X14
CS1 X13
CS1 X12
CS1 X11
CS2 X10
CS2 X9
CS2 X8

CHK	CHANGE NO.	REV.
	REVISIONS	
	M8657-00001	A
	H. Demmore 6-18-76	
	R.HARTZ	
	R. Hartz 6-27-76	
	M3657-00002	C
	J.WILLIAMS	
	M. Lawrence 11 oct 76	
	M8657-00003	D
	Dan O'Connell 9-Aug-77	
K.T	M8657-YA-00001	E
	D. Chiasson 5 August 77	
	J WILLIAMS	

DEC FORM NO.
DRD 102-D

DRN. K. Dale	12-18-75	FIRST USED ON M8657	digital
CHK'D J. Williams	3/25/76	TITLE VT 71 CONTROL SECTION (CS1)	
ENG. J. Williams	3/25/76		
PROJ. ENG. J. Williams	3/25/76		
PROD.	3-25-76		
NEXT HIGHER ASSY. D-UA-M8657-YA-0		SIZE D, CODE CS, NUMBER M8657-YA-1	REV. E
SCALE			
SHEET 1 OF 5		DIST.	

60

NOTES:
1. UNLESS OTHERWISE INDICATED ALL SIG'S. ARE TRUE HIGH.

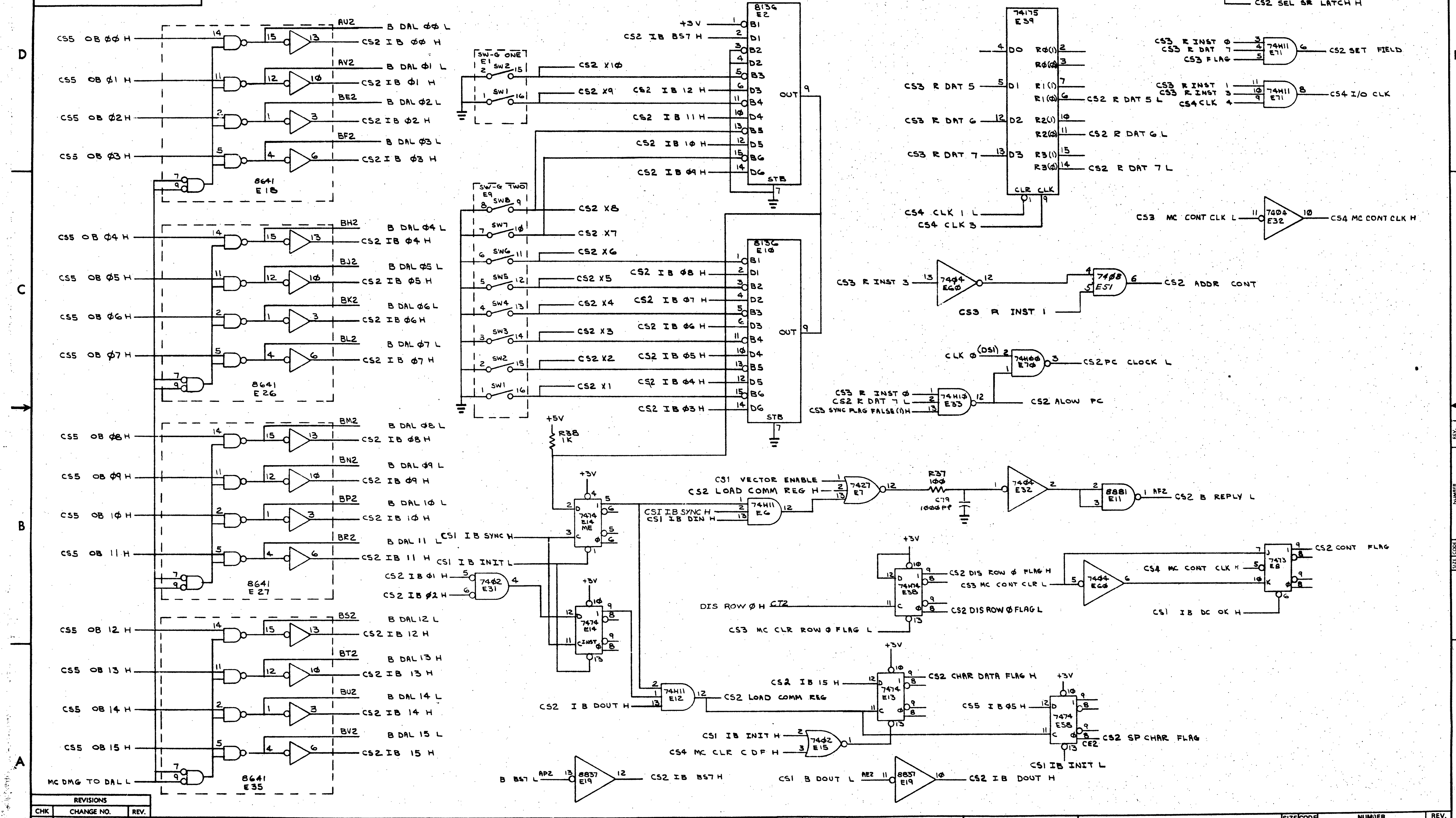
CS5 OB 00 H
CS5 OB 01 H
CS5 OB 02 H
CS5 OB 03 H
B DAL 00 L
CS2 IB 00 H
B DAL 01 L
CS2 IB 01 H
B DAL 02 L
CS2 IB 02 H
B DAL 03 L
CS2 IB 03 H
AU2
AV2
BE2
BF2
8641
E18
CS5 OB 04 H
CS5 OB 05 H
CS5 OB 06 H
CS5 OB 07 H
B DAL 04 L
CS2 IB 04 H
B DAL 05 L
CS2 IB 05 H
B DAL 06 L
CS2 IB 06 H
B DAL 07 L
CS2 IB 07 H
BH2
BJ2
BK2
BL2
8641
E26
CS5 OB 08 H
CS5 OB 09 H
CS5 OB 10 H
CS5 OB 11 H
B DAL 08 L
CS2 IB 08 H
B DAL 09 L
CS2 IB 09 H
B DAL 10 L
CS2 IB 10 H
B DAL 11 L
CS2 IB 11 H
BM2
BN2
BP2
BR2
8641
E27
CS5 OB 12 H
CS5 OB 13 H
CS5 OB 14 H
CS5 OB 15 H
MC DMG TO DAL L
B DAL 12 L
CS2 IB 12 H
B DAL 13 H
CS2 IB 13 H
B DAL 14 L
CS2 IB 14 H
B DAL 15 L
CS2 IB 15 H
BS2
BT2
BU2
BV2
8641
E35
SW-G ONE
E1
SW2
SW1
CS2 X10
CS2 X9
SW-G TWO
E9
SW8
SW7
SW6
SW5
SW4
SW3
SW2
SW1
CS2 X8
CS2 X7
CS2 X6
CS2 X5
CS2 X4
CS2 X3
CS2 X2
CS2 X1
8136
E2
+3V
CS2 IB BS7 H
CS2 IB 12 H
CS2 IB 11 H
CS2 IB 10 H
CS2 IB 09 H
OUT
STB
8136
E10
CS2 IB 08 H
CS2 IB 07 H
CS2 IB 06 H
CS2 IB 05 H
CS2 IB 04 H
CS2 IB 03 H
+5V
R38
1K
+3V
7474
E14
ME
CS1 IB SYNC H
CS1 IB INIT L
CS2 IB 01 H
CS2 IB 02 H
7402
E31
7474
E14
CINST
CS2 IB DOUT H
74H11
E12
CS2 LOAD COMM REG
B BS7 L
AP2
8837
E19
CS2 IB BS7 H
CS1 VECTOR ENABLE
CS2 LOAD COMM REG H
7427
E7
CS1 IB SYNC H
CS1 IB DIN H
74H11
E6
R37
100
C79
1000 PF
7404
E32
8881
E11
AF2
CS2 B REPLY L
74175
E39
CS3 R DAT 5
CS3 R DAT 6
CS3 R DAT 7
CS4 CLK 1 L
CS4 CLK 3
CLR CLK
CS2 R DAT 5 L
CS2 R DAT 6 L
CS2 R DAT 7 L
CS3 R INST 2
+3V
0 FLAG
CV2
74H11
E6
CS2 ADDR CONT
7402
E31
CS2 PC LOAD L
CS2 SEL SR LATCH H
CS3 R INST 0
CS3 R DAT 7
CS3 FLAG
74H11
E71
CS2 SET FIELD
CS3 R INST 1
CS3 R INST 3
CS4 CLK 4
74H11
E71
CS4 I/O CLK
CS3 MC CONT CLK L
7404
E32
CS4 MC CONT CLK H
CS3 R INST 3
7404
E60
7408
E51
CS2 ADDR CONT
CS3 R INST 1
CLK 0
DS1
74H00
E70
CS2 PC CLOCK L
CS3 R INST 0
CS2 R DAT 7 L
CS3 SYNC FLAG FALSE (1) H
74H10
E33
CS2 ALOW PC
+3V
7474
E38
CS2 DIS ROW 0 FLAG H
CS3 MC CONT CLR L
DIS ROW 0 H
CT2
CS2 DIS ROW 0 FLAG L
CS3 MC CLR ROW 0 FLAG L
CS4 MC CONT CLK H
7404
E60
7473
E8
CS2 CONT FLAG
CS1 IB DC OK H
+3V
CS2 IB 15 H
7474
E13
CS2 CHAR DATA FLAG H
CS1 IB INIT H
CS4 MC CLR CDF H
7402
E15
+3V
CS5 IB 05 H
7474
E58
CE2
CS2 SP CHAR FLAG
CS1 IB INIT L
CS1 B DOUT L
AE2
8837
E19
CS2 IB DOUT H

REVISIONS		
CHK	CHANGE NO.	REV.

TITLE VT71 CONTROL SECTION (CS2)
SIZE D
CODE CS
NUMBER M8657-YA-1
REV. E
SCALE —/—/
SHEET 2 OF 5
DIST.

NOTES:
1. UNLESS OTHERWISE INDICATED ALL SIG'S. ARE TRUE HIGH.

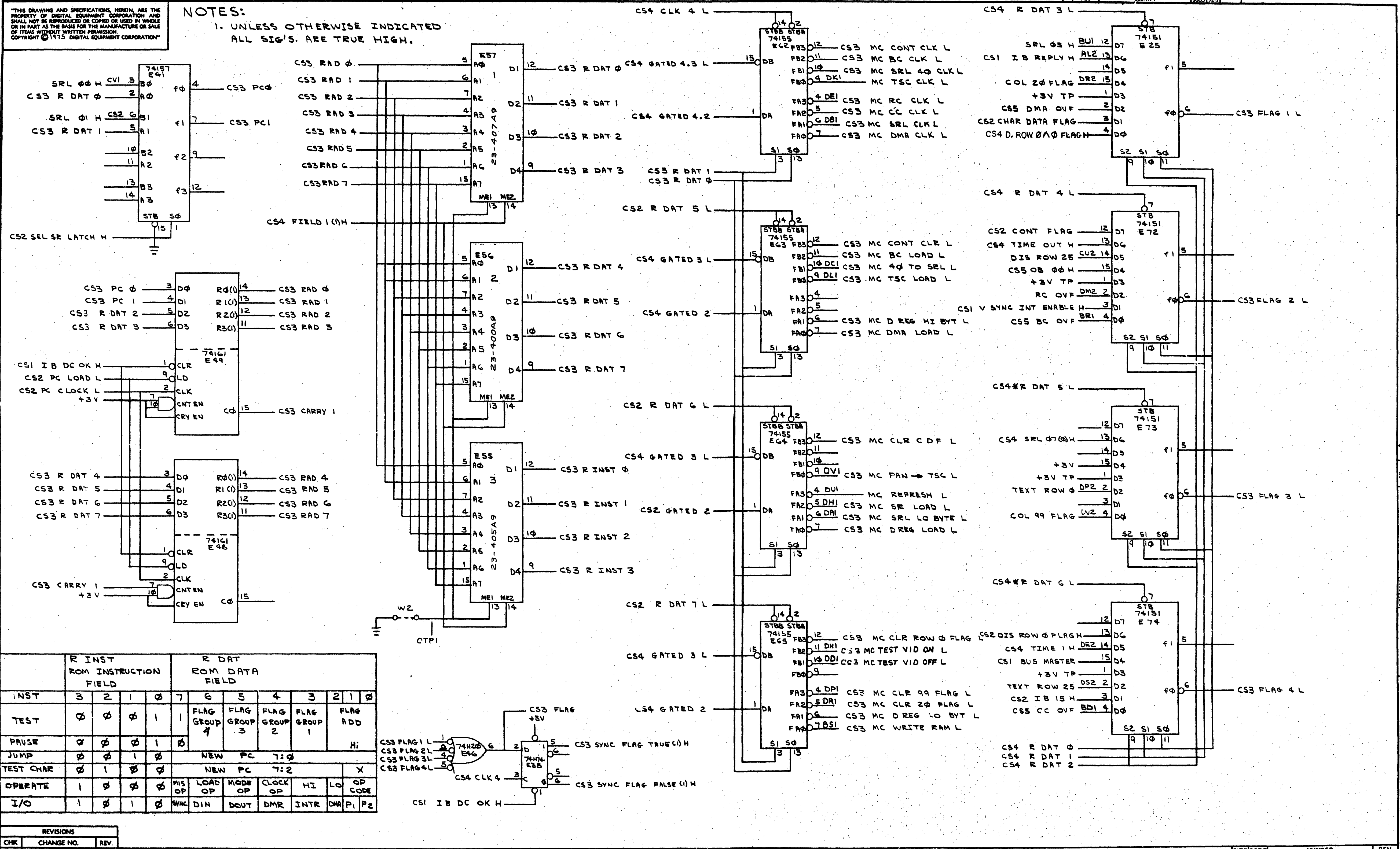

74157 E41
SRL 00 H
CV1
CS3 R DAT 0
SRL 01 H
CS2 G
CS3 R DAT 1
CS3 PC0
CS3 PC1
CS2 SEL SR LATCH H
CS3 PC 0
CS3 PC 1
CS3 R DAT 2
CS3 R DAT 3
74161 E49
CS1 IB DC OK H
CS2 PC LOAD L
CS2 PC CLOCK L
+3V
CS3 RAD 0
CS3 RAD 1
CS3 RAD 2
CS3 RAD 3
CS3 CARRY 1
CS3 R DAT 4
CS3 R DAT 5
CS3 R DAT 6
CS3 R DAT 7
74161 E48
CS3 RAD 4
CS3 RAD 5
CS3 RAD 6
CS3 RAD 7
CS4 FIELD 1 (1) H
E57 1 23-407A9
E56 2 23-400A9
E55 3 23-405A9
W2
CTP1
CS3 R DAT 0
CS3 R DAT 1
CS3 R DAT 2
CS3 R DAT 3
CS3 R DAT 4
CS3 R DAT 5
CS3 R DAT 6
CS3 R DAT 7
CS3 R INST 0
CS3 R INST 1
CS3 R INST 2
CS3 R INST 3
CS3 FLAG 1 L
CS3 FLAG 2 L
CS3 FLAG 3 L
CS3 FLAG 4 L
74H20 E46
CS3 FLAG
+3V
74H74 E38
CS4 CLK 4
CS3 SYNC FLAG TRUE (1) H
CS3 SYNC FLAG FALSE (1) H
CS1 IB DC OK H
CS4 CLK 4 L
74155 E62
CS4 GATED 4.3 L
CS4 GATED 4.2
CS3 R DAT 1
CS3 R DAT 0
CS3 MC CONT CLK L
CS3 MC BC CLK L
CS3 MC SRL 40 CLK L
MC TSC CLK L
CS3 MC RC CLK L
CS3 MC CC CLK L
CS3 MC SRL CLK L
CS3 MC DMA CLK L
CS2 R DAT 5 L
74155 E63
CS4 GATED 3 L
CS4 GATED 2
CS3 MC CONT CLR L
CS3 MC BC LOAD L
CS3 MC 40 TO SEL L
CS3 MC TSC LOAD L
CS3 MC D REG HI BYT L
CS3 MC DMA LOAD L
CS2 R DAT 6 L
74155 E64
CS4 GATED 3 L
CS2 GATED 2
CS3 MC CLR CDF L
CS3 MC PAN → TSC L
MC REFRESH L
CS3 MC SR LOAD L
CS3 MC SRL LO BYTE L
CS3 MC DREG LOAD L
CS2 R DAT 7 L
74155 E65
CS4 GATED 3 L
CS4 GATED 2
CS3 MC CLR ROW 0 FLAG L
CS3 MC TEST VID ON L
CS3 MC TEST VID OFF L
CS3 MC CLR 99 FLAG L
CS3 MC CLR 20 FLAG L
CS3 MC D REG LO BYT L
CS3 MC WRITE RAM L
CS4 R DAT 3 L
74151 E25
SRL 03 H
CS1 IB REPLY H
COL 20 FLAG
+3V TP
CS5 DMA OVF
CS2 CHAR DATA FLAG
CS4 D. ROW 0 A 0 FLAG H
CS4 R DAT 4 L
74151 E72
CS2 CONT FLAG
CS4 TIME OUT H
DIS ROW 25
CS5 OB 00 H
+3V TP
RC OVF
CS1 V SYNC INT ENABLE H
CS5 BC OVF
CS4 R DAT 5 L
74151 E73
CS4 SRL 07 (0) H
+3V
+3V TP
TEXT ROW 0
COL 99 FLAG
CS4 R DAT 6 L
74151 E74
CS2 DIS ROW 0 FLAG H
CS4 TIME 1 H
CS1 BUS MASTER
+3V TP
TEXT ROW 25
CS2 IB 15 H
CS5 CC OVF
CS4 R DAT 0
CS4 R DAT 1
CS4 R DAT 2

	R INST ROM INSTRUCTION FIELD				R DAT ROM DATA FIELD							
INST	3	2	1	0	7	6	5	4	3	2	1	0
TEST	0	0	0	1	1	FLAG GROUP 4	FLAG GROUP 3	FLAG GROUP 2	FLAG GROUP 1	FLAG ADD Hi		
PAUSE	0	0	0	1	0							
JUMP	0	0	1	0	NEW PC 7:0							
TEST CHAR	0	1	0	0	NEW PC 7:2						X	
OPERATE	1	0	0	0	MIS OP	LOAD OP	MODE OP	CLOCK OP	HI	LO	OP CODE	
I/O	1	0	1	0	SYNC	DIN	DOUT	DMR	INTR	DMA	P1	P2

REVISIONS		
CHK	CHANGE NO.	REV.

TITLE VT71 CONTROL SECTION (CS3)
SIZE D CODE CS NUMBER M8657-YA-1 REV. E
SCALE — SHEET 3 OF 5 DIST.

DEC FORM NO. DRD 138

NOTES:

1. UNLESS OTHERWISE INDICATED ALL SIG'S. ARE TRUE HIGH.

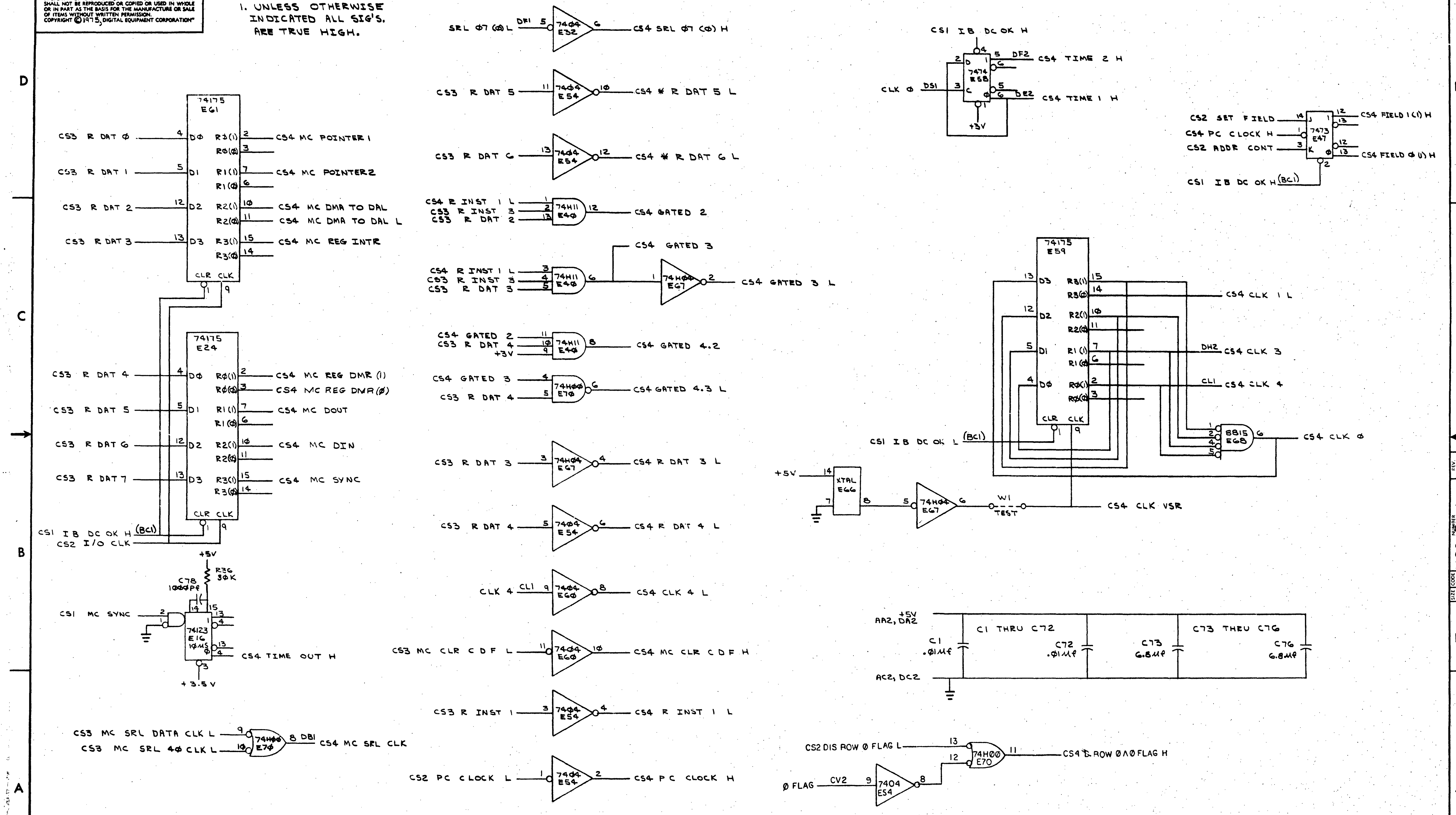
74175 E61
CS3 R DAT 0
CS3 R DAT 1
CS3 R DAT 2
CS3 R DAT 3
CS4 MC POINTER 1
CS4 MC POINTER 2
CS4 MC DMA TO DAL
CS4 MC DMA TO DAL L
CS4 MC REG INTR
74175 E24
CS3 R DAT 4
CS3 R DAT 5
CS3 R DAT 6
CS3 R DAT 7
CS4 MC REG DMR (1)
CS4 MC REG DMR (0)
CS4 MC DOUT
CS4 MC DIN
CS4 MC SYNC
CS1 I B DC OK H (BC1)
CS2 I/O CLK
+5V
R36 30K
C78 1000PF
CS1 MC SYNC
74123 E16 10MS
CS4 TIME OUT H
+3.5V
CS3 MC SRL DATA CLK L
CS3 MC SRL 40 CLK L
74H00 E70
DB1
CS4 MC SRL CLK
SRL 07 (0) L
DF1
7404 E32
CS4 SRL 07 (0) H
CS3 R DAT 5
7404 E54
CS4 * R DAT 5 L
CS3 R DAT 6
CS4 * R DAT 6 L
CS4 R INST 1 L
CS3 R INST 3
CS3 R DAT 2
74H11 E40
CS4 GATED 2
CS4 GATED 3
CS4 R INST 1 L
CS3 R INST 3
CS3 R DAT 3
74H00 E67
CS4 GATED 3 L
CS4 GATED 2
CS3 R DAT 4
+3V
CS4 GATED 4.2
CS4 GATED 3
CS3 R DAT 4
74H00 E70
CS4 GATED 4.3 L
CS3 R DAT 3
7404 E67
CS4 R DAT 3 L
CS3 R DAT 4
7404 E54
CS4 R DAT 4 L
CLK 4
CL1
7404 E60
CS4 CLK 4 L
CS3 MC CLR C D F L
CS4 MC CLR C D F H
CS3 R INST 1
CS4 R INST 1 L
CS2 PC CLOCK L
CS4 PC CLOCK H
CS1 IB DC OK H
7474 E58
CLK 0
DS1
DF2
CS4 TIME 2 H
DE2
CS4 TIME 1 H
+3V
CS2 SET FIELD
CS4 PC CLOCK H
CS2 ADDR CONT
CS1 IB DC OK H (BC1)
7473 E47
CS4 FIELD 1 (1) H
CS4 FIELD 0 (1) H
74175 E59
CS4 CLK 1 L
DH2
CS4 CLK 3
CL1
CS4 CLK 4
8815 E68
CS4 CLK 0
CS1 I B DC OK L (BC1)
+5V
XTAL E66
74H04 E67
W1
TEST
CS4 CLK VSR
+5V
AA2, DA2
C1 .01MF
C1 THRU C72
C72 .01MF
C73 6.8MF
C73 THRU C76
C76 6.8MF
AC2, DC2
CS2 DIS ROW 0 FLAG L
74H00 E70
CS4 D ROW 0 A 0 FLAG H
0 FLAG
CV2
7404 E54

REVISIONS		
CHK	CHANGE NO.	REV.

TITLE VT 71 CONTROL SECTION (CS4)

SIZE D CODE CS NUMBER M8657-YA-1 REV. E

SCALE —— SHEET 4 OF 5 DIST.

DEC FORM NO. DDD 130

NOTES:
1. UNLESS OTHERWISE INDICATED ALL SIG'S. ARE TRUE HIGH.

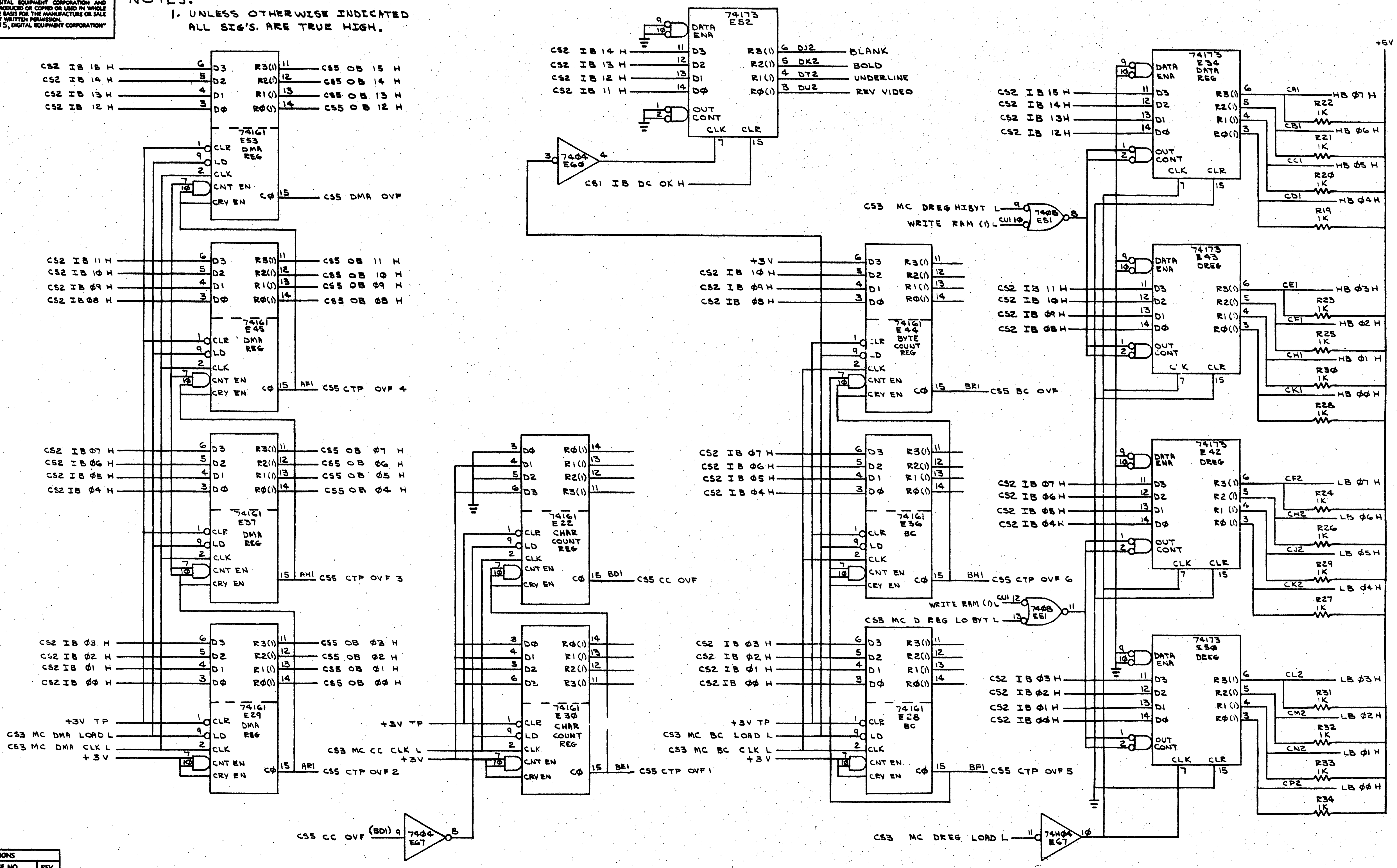
CS2 IB 15 H
CS2 IB 14 H
CS2 IB 13 H
CS2 IB 12 H
CS5 OB 15 H
CS5 OB 14 H
CS5 OB 13 H
CS5 OB 12 H
74161
E53
DMA REG
CS5 DMA OVF
CS2 IB 11 H
CS2 IB 10 H
CS2 IB 09 H
CS2 IB 08 H
CS5 OB 11 H
CS5 OB 10 H
CS5 OB 09 H
CS5 OB 08 H
74161
E45
DMA REG
AF1
CS5 CTP OVF 4
CS2 IB 07 H
CS2 IB 06 H
CS2 IB 05 H
CS2 IB 04 H
CS5 OB 07 H
CS5 OB 06 H
CS5 OB 05 H
CS5 OB 04 H
74161
E37
DMA REG
AH1
CS5 CTP OVF 3
CS2 IB 03 H
CS2 IB 02 H
CS2 IB 01 H
CS2 IB 00 H
CS5 OB 03 H
CS5 OB 02 H
CS5 OB 01 H
CS5 OB 00 H
+3V TP
CS3 MC DMA LOAD L
CS3 MC DMA CLK L
+3V
74161
E29
DMA REG
AR1
CS5 CTP OVF 2
74173
E52
DATA ENA
OUT CONT
CLK
CLR
CS2 IB 14 H
CS2 IB 13 H
CS2 IB 12 H
CS2 IB 11 H
DJ2
DK2
DT2
DU2
BLANK
BOLD
UNDERLINE
REV VIDEO
7404
E60
CS1 IB DC OK H
74161
E22
CHAR COUNT REG
BD1
CS5 CC OVF
+3V TP
CS3 MC CC CLK L
+3V
74161
E30
CHAR COUNT REG
BE1
CS5 CTP OVF 1
CS5 CC OVF
(BD1)
7404
E67
+3V
CS2 IB 10 H
CS2 IB 09 H
CS2 IB 08 H
74161
E44
BYTE COUNT REG
BR1
CS5 BC OVF
CS2 IB 07 H
CS2 IB 06 H
CS2 IB 05 H
CS2 IB 04 H
74161
E36
BC
BH1
CS5 CTP OVF 6
WRITE RAM (1) L
CU1
CS3 MC D REG LO BYT L
7408
E51
CS2 IB 03 H
CS2 IB 02 H
CS2 IB 01 H
CS2 IB 00 H
+3V TP
CS3 MC BC LOAD L
CS3 MC BC CLK L
+3V
74161
E28
BC
BF1
CS5 CTP OVF 5
CS3 MC DREG HIBYT L
WRITE RAM (1) L
7408
E51
74173
E34
DATA REG
CS2 IB 15 H
CS2 IB 14 H
CS2 IB 13 H
CS2 IB 12 H
CA1
CB1
CC1
CD1
HB 07 H
HB 06 H
HB 05 H
HB 04 H
R22 1K
R21 1K
R20 1K
R19 1K
+5V
74173
E43
DREG
CS2 IB 11 H
CS2 IB 10 H
CS2 IB 09 H
CS2 IB 08 H
CE1
CF1
CH1
CK1
HB 03 H
HB 02 H
HB 01 H
HB 00 H
R23 1K
R25 1K
R30 1K
R28 1K
74173
E42
DREG
CS2 IB 07 H
CS2 IB 06 H
CS2 IB 05 H
CS2 IB 04 H
CF2
CH2
CJ2
CK2
LB 07 H
LB 06 H
LB 05 H
LB 04 H
R24 1K
R26 1K
R29 1K
R27 1K
74173
E50
DREG
CS2 IB 03 H
CS2 IB 02 H
CS2 IB 01 H
CS2 IB 00 H
CL2
CM2
CN2
CP2
LB 03 H
LB 02 H
LB 01 H
LB 00 H
R31 1K
R32 1K
R33 1K
R34 1K
CS3 MC DREG LOAD L
74H04
E67

REVISIONS		
CHK	CHANGE NO.	REV.

TITLE	SIZE	CODE	NUMBER	REV.
VT71 CONTROL SECTION (CS5)	D	CS	M8657-YA-1	E
SCALE —	SHEET 5 OF 5		DIST.	

DEC FORM NO. DRD 138

64

This document contains confidential proprietary information of DEC. This information shall not be disclosed to persons outside the employ of DEC, except by DEC personnel so authorized by DEC, and only for use by such other persons in the design, production or manufacture of products for DEC. Copyright © 1976 Digital Equipment Corporation.

DIGITAL EQUIPMENT CORPORATION
MAYNARD, MASSACHUSETTS

ENGINEERING SPECIFICATION

DATE 1/12/76

TITLE M8657 CONTROL MODULE

REVISIONS

REV	DESCRIPTION	CHG NO	ORIG	DATE	APPD BY	DATE

ENG	APPD	SIZE	CODE	NUMBER	REV
Jack F. Williams	J. F. Williams	A	SP	M8657-0-8	

DEC 16-(392)-1079A-R873
DRA 107A

SHEET 1 OF 3

ENGINEERING SPECIFICATION

CONTINUATION SHEET

TITLE M8657 CONTROL MODULE

1.1 The M8657 is a control processor interface between the VT21 Video Module(M8658) and the LSI-11 Bus. It is both a DMA and INT. device.

1.2 The M8657 receives, from the M8658, all status information required to control the raster scan display. It transmits to the M8658, 16 bits of address and data, control and timing.

1.3 POWER REQUIREMENTS:

+5VDC AT 4.1 A MAX./3.0 A TYP.

2.1 The module has switch selectable vector and device address. There are three other addresses which will be called pointer addresses. They are consecutive and will follow the selected vector address.

3.0 DEVICE, VECTOR AND POINTER ADDRESS

Switch Off = 1/On = 0

Device	Vector	Pointer 1	Pointer 2	Pointer 1 & 2
177670	360	364	366	370

4.0 FINGER PINNING

+5VDC	AA2	GND	BT1	B DMG I L *	AR2
	BA2		CC2	B DMG O L *	AS2
	CA2		CJ1	B INIT L	AT2
	DA2		CM1	B DAL 0 L	AU2
			CT1	B DAL 1 L	AV2
+12VDC	AD2		DC2	B DAL 2 L	BE2
	BD2		DJ1	B DAL 3 L	BF2
	CD2		DM1	B DAL 4 L	BH2
	DD2		DT1	B DAL 5 L	BJ2
		B DOUT L	AE2	B DAL 6 L	BK2
GND	AC2	B RPLY L	AF2	B DAL 7 L	BL2
	AJ1	B DIN L	AH2	B DAL 8 L	BM2
	AM1	B SYNC L	AJ2	B DAL 9 L	BN2
	AT1	B IRQ L	AL2	B DAL 10L	BP2
	BC2	B IAK I L*	AM2	B DAL 11L	BR2
	BJ1	B IAK O L*	AN2	B DAL 12L	BS2
	BM1	B BS7 L	AP2	B DAL 13L	BT2

SIZE	CODE	NUMBER	REV
A	SP	M8657-0-8	

DEC FORM NO DEC 16-(381)-1022-N370
DRA 108

SHEET 2 OF 3

ENGINEERING SPECIFICATION

CONTINUATION SHEET

TITLE M8657 CONTROL MODULE

B DAL 14L	BU2	TEXT ROW 25	DS2	HB 03 H	CE1
B DAL 15L	BV2	UNDERLINE	DT2	HB 02 H	CF1
SP CHAR. FLAG	CE2	REV. VIDEO	DU2	HB 01 H	CH1
LB07 H	CF2	COL 99 FLAG	DV2	HB 00 H	CK1
LB06 H	CH2	DMA OVF	AE1	CLK 4	CL1
LB05 H	CJ2	CTP OVF 4	AF1	PAN 00	CN1
LB04 H	CK2	CTP OVF 3	AH1	PAN 01	CP1
LB03 H	CL2	B DMR L	AN1	PAN 02	CR1
LB02 H	CM2	CTP OVF 2	AR2	PAN 03	CS1
LB01 H	CN2	CTP 1	AS1	WRITE RAM(1) L	CU1
LB00 H	CP2	CLK 1 L	AV1	SRL 00 H	CV1
DIS. SCAN 0	CR2	BDCOK H	BA1	MC SRL LO BYTE L	DA1
SRL 01H	CS2	IB DCOK H	BC1	MC SRL CLK	DB1
DIS.ROW 0 COL20	CT2	CC OVF	BD1	MC 40→SRL L	DC1
DIS. ROW 25 H	CU2	CTP OVF 1	BE1	MC T.VID OFF L	DD1
0 FLAG	CV2	CTP OVF 5	BF1	MC CLK RC L	DE1
TIME 1 H	DE2	CTP OVF 6	BH1	SRL 07 (0) L	DF1
TIME 2 H	DF2	B SACK L	BN1	MC LOAD SR	DH1
CLK 3	DH2	BC OVF	BR1	MC TSC CLK L	DK1
BLANK	DJ2	MC WRITE RAM L	BS1	MC TSC LOAD L	DL1
BOLD	DK2	SRL 05 H	BU1	MCT. VID ON L	DN1
CLK VSR	DL2	+3V-CTP	BV1	MC CLR 99 FLAG L	DP1
RC OVF	DM2	HB 07 H	CA1	MC CLR 20 FLAG	DR1
SCAN 0 FLAG	DN2	HB 06 H	CB1	CLK 0	DS1
TEXT ROW 0	DP2	HB 05 H	CC1	MC REFRESH L	DU1
COL 20 FLAG	DR2	HB 04 H	CD1	MC PAN →TSC L	DUL

NOTE: 1

* These signals are not bussed - They are daisy chained.

NOTE: 2

All unlisted pins are unused LSI-11 bus lines and must not be used.

SIZE	CODE	NUMBER	REV
A	SP	M8657-0-8	

SHEET ____ OF

REWORK INSTRUCTIONS:

ECO # 1

COMPONENT DELETES SIDE 1:
1-1. DELETE C97, 1000PF (P/N 1000042)
1-2. DELETE C98, 1000PF (P/N 1000042)
1-3. DELETE R39, 120Ω (P/N 1300247)
1-4. DELETE R40, 330Ω (P/N 1300295)
COMPONENT ADDS SIDE 1:
1-5. ADD C97, 1200PF (P/N 1002424)
1-6. ADD C98, 1200PF (P/N 1002424)
1-7. ADD R39, 150Ω (P/N 1300250)
1-8. ADD R40, 220Ω (P/N 1300271)

ECO #2

COMPONENT DELETES SIDE 1:
2-1. DELETE R40, 220Ω (P/N 1300271)
2-2. DELETE D7, 1N4004 (P/N 1105796)
2-3. DELETE R25, 33Ω (P/N 1300147)
COMPONENT ADDS SIDE 1:
2-4. ADD R40, 330Ω (P/N 1300295)
2-5 ADD W14, JUMPER (P/N 9009185)
2-6 ADD R25, 10Ω (P/N 1301317)

ECO #3

COMPONENT DELETE SIDE 1:
3-1 DELETE R39, 150Ω (P/N 1300250)
3-2 DELETE W14, JUMPER (P/N 9009185)
COMPONENT ADDS SIDE 1:
3-3 ADD R39, 120Ω (P/N 1300247)
3-4 ADD R43, 33Ω (P/N 1300197)

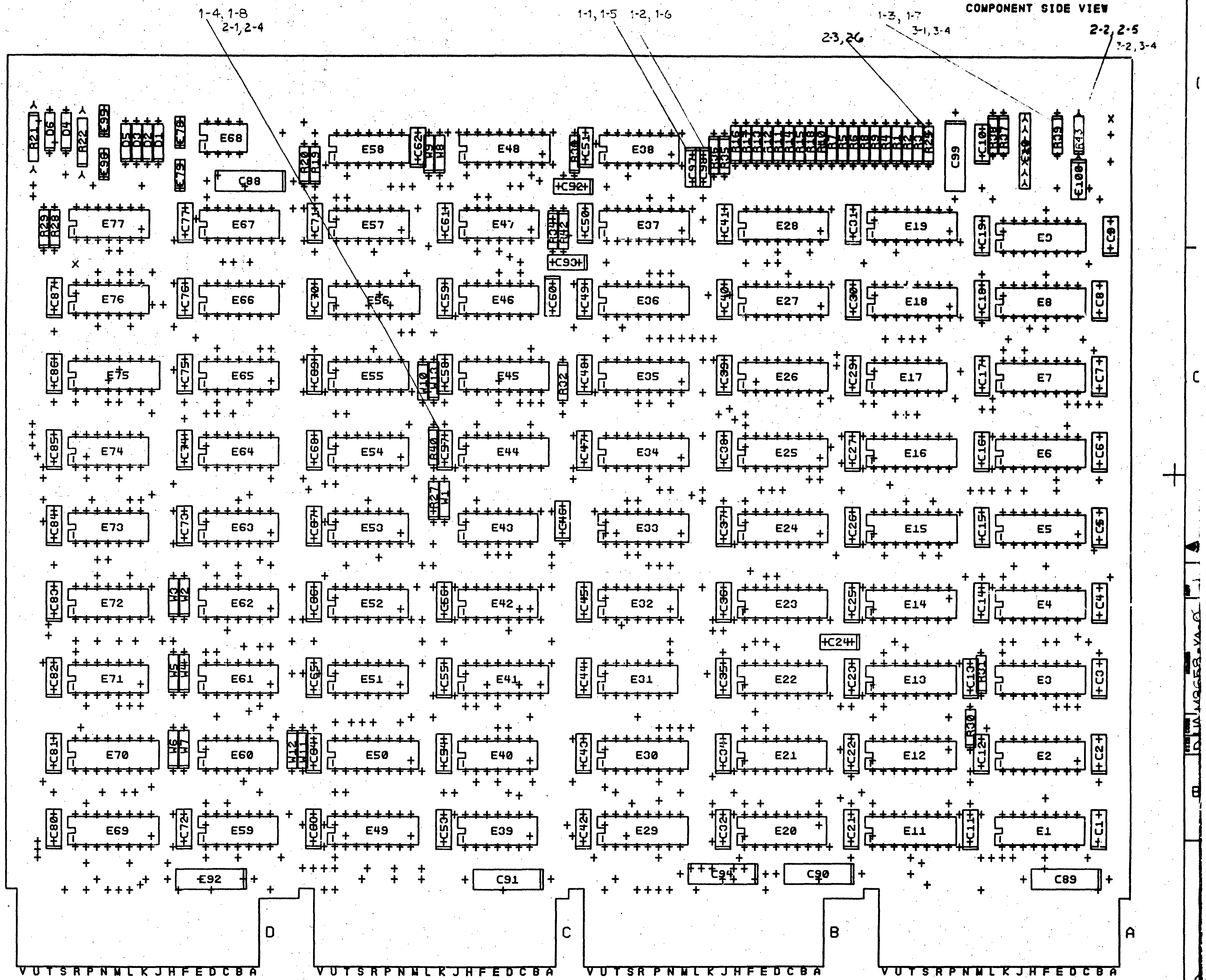
COMPONENT SIDE VIEW
1-4, 1-8
2-1, 2-4
1-1, 1-5
1-2, 1-6
2-3, 2-6
1-3, 1-7
3-1, 3-4
2-2, 2-5
3-2, 3-4
E1 E2 E3 E4 E5 E6 E7 E8 E9 E10
E11 E12 E13 E14 E15 E16 E17 E18 E19 E20
E21 E22 E23 E24 E25 E26 E27 E28 E29 E30
E31 E32 E33 E34 E35 E36 E37 E38 E39 E40
E41 E42 E43 E44 E45 E46 E47 E48 E49 E50
E51 E52 E53 E54 E55 E56 E57 E58 E59 E60
E61 E62 E63 E64 E65 E66 E67 E68 E69 E70
E71 E72 E73 E74 E75 E76 E77
C88 C89 C90 C91 C92 C93 C94 C99 C100
R39 R40 R43
A
B
C
D
V U T S R P N M L K J H F E D C B A

NOTES:

CHK	CHANGE NO	REDRAWN/REVISED	REV
@	M8658-YA-1	D. Bunker 3-?-77	F
	J. WILLIAMS		
	M8658-YA-2	Steve Miller MAR 78	H
	D. O'CONNELL		
	M8658-YA-MK003	10-3-78	J
	D. O'CONNELL		

HOLE DATA										
SYMBOL	+	⅄	X	4	Z	H	△	◫	◇	✱
FIN HOLE SIZE	.038	.042	.156							
PLATED	X	X	X							
NON PLATED										
QTY.	2147	13	2							
○-OFF GRD HLE										
DRILL SIZE										

BOARD FABRICATION INFORMATION	
PANEL SIZE	8.5 QUAD
PANEL DATA DWG.#	D-MD-7605819
PANEL MAT'L	.052 THK.
QTY. OF LAYERS	2
COPPER THICKNESS	1 OZ
PTH. ✓ PRINT AND ETCH	
MODULE INSERTED 100 TIMES OR MORE?	

SIGNATURES	DATE
DRN. J. CARTER	11-5-76
CHK'D.	3-3-77
ENG. Dan O'Connell	3-9-77
PROJ. ENG. Dan O'Connell	3-9-77
PROD.	
SCALE 2X	
SHT. 1 OF 3	
NEXT HIGHER ASSY.	

digital

TITLE
VT71 VIDEO

SIZE	CODE	NUMBER	REV
D	UA	M8658-YA-0	J

ETCH REV. D

MK 1 MS#

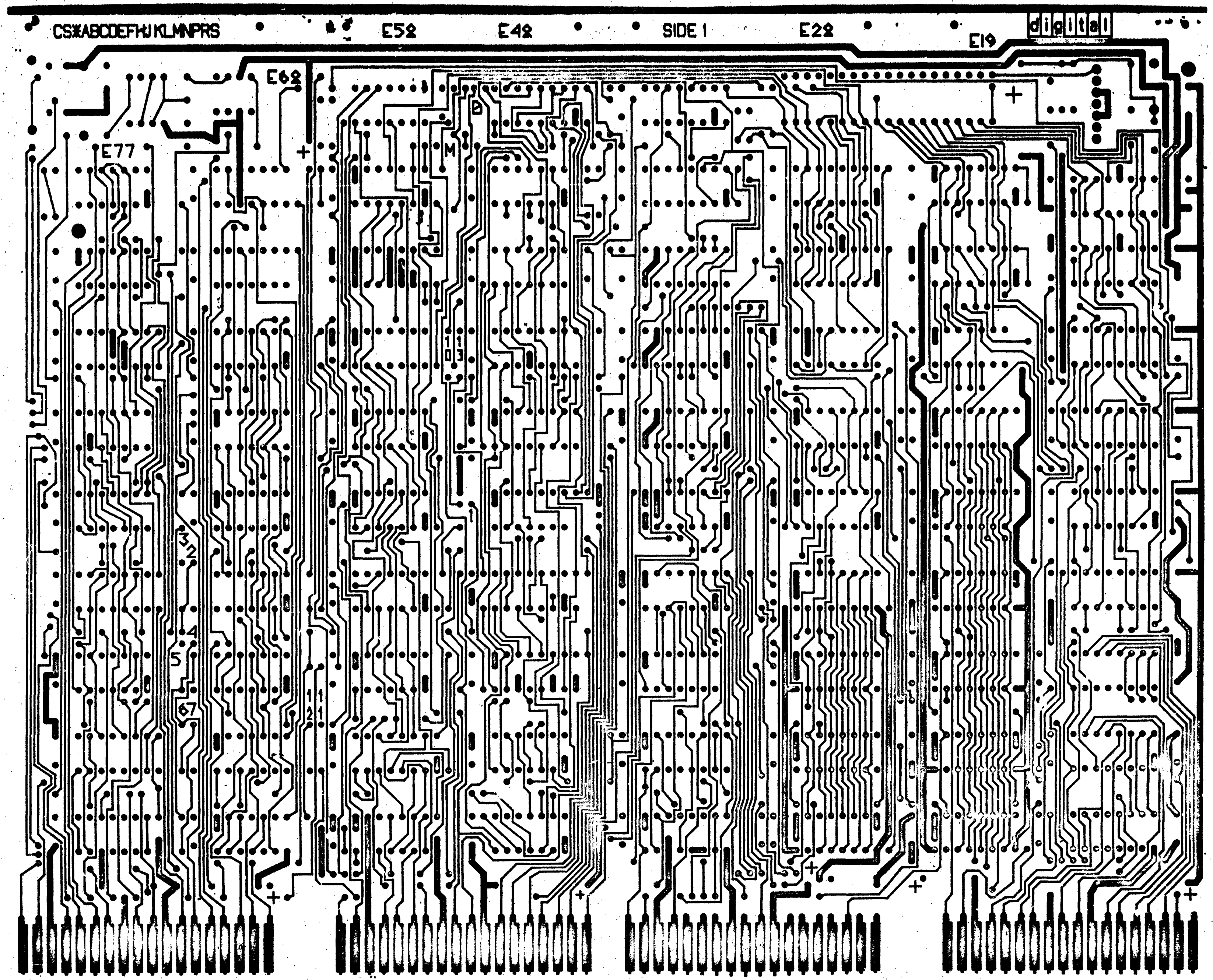
CS*ABCDEFHJKLMNPRS
E52
E42
SIDE 1
E22
E19
digital
E62
E77
B
M
+

REVISIONS		
CHK	CHANGE NO.	REV

TITLE	SIZE	CODE	NUMBER	REV.
VT71 VIDEO	D	UA	M8658-YA-0	J
SCALE 2/1 SHEET 2 OF 3	DIST.			

M8658-YA-0

MK 1

SCALE 2/1	SHEET 3 OF 3	DIST
TITLE VT71 VIDEO	SIZE D · CODE AU	NUMBER M8658-YA-0 · REV. C

WK 1

CHK	CHANGE NO.	REV.
REVISIONS		

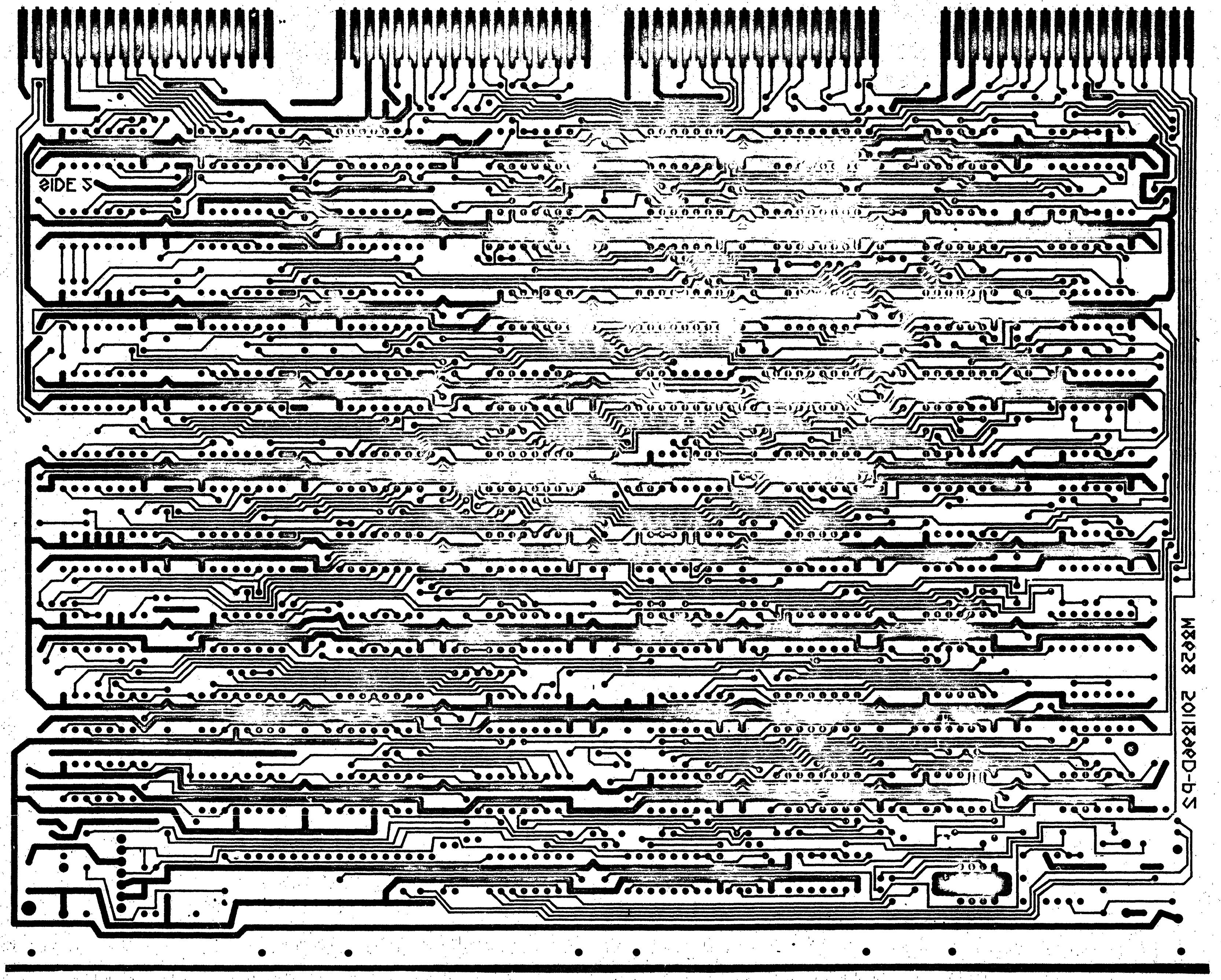
SIDE 2
5018660-D-2 M8658

68

M8658-YA-0 AU 2 C

DIGITAL EQUIPMENT CORPORATION
PARTS LIST

MADE BY J. WILLIAMS **DATE** 11-10-75	**CHECKED** J. WILLIAMS **DATE** 2-24-76	**SECTION** 1	**QUANTITY / VARIATION**
ENG J. J. Williams **DATE** 3/25/76	**PROD** **DATE** 3-25-76	**ISSUED SECTION** 1	**NOTES:**

ITEM NO.	DRAWING NO.	PART NO.	DESCRIPTION	M8658-YA	REF DESIGNATION
1	~~CS-M8658-0-1~~		~~CIRCUIT SCHEMATIC~~		
2	~~K-CO-M8658-0-4~~		~~X-Y COORDINATE HOLE LOCATION~~		
3	~~D-AH-M8658-0-5~~		~~ASSY/DRILL HOLE LAYOUT~~		
4	~~D-MH-M8658-0-6~~		~~MODULE ECO HISTORY~~		
5		5011896	ETCHED CIRCUIT BOARD		
6		1009678	CAP .047 Uf 16V	1	C93
7		1001610-00	CAP .01 Uf	65	C1-C7, C17, C100, C42-C51, C53-C59, C61-C77 C80-C87, C10, C12, C14, C16, C26, C34-36 C29, C37-C41
9		1010279	CAP .47 Uf	20	C8, C9, C11, C13, C15, C18, C19, C78, C79, C95, C96, C32, C27, C21-C25, C30, C31
10		1000042	CAP 1000 Pf	1	C52
11		1100114	DIODE D664	4	D1, D2, D3, D5
12		1109502	DIODE IN4742	1	D6
13		1110994	DIODE IN751A	1	D4
14		1300195	RES. 33 OHMS 1/2W 5%	1	R21
15		1300197	RES. 33 OHMS 1/4W 5%	2	R32, R43
16		1300243	RES. 120 OHMS 1/2W	1	R22
17		1300271	RES. 220 OHMS 1/4W 5%	4	R19, R20, R28, R30,
18		1002424	CAP 1200 pf	2	C97, C98
19		1300309	RES. 390 OHMS	2	R29, R31,
20		1300447	RES. 4.7K	20	R1-R18, R27, R42

E.C.O. NO.
M8658-1
M8658-2
M8658-3
M8658-YA-1
M8658-YA2
M8658-YA MK003

TITLE VT71 VIDEO	**ASSY NO.** D-UA- M8658-YA-0	**SIZE** B	**CODE** PL	**NUMBER** M8658-YA-0	**REV.** J
	SHEET 1 **OF** 4	**INSERTION PARTS LIST DATA BASE REV**			B

EN-01140A-16-R276(325) DRB 125

MK

DIGITAL EQUIPMENT CORPORATION

PARTS LIST

MADE BY J. WILLIAMS DATE 11-10-75	CHECKED J. WILLIAMS DATE 2-24-76	SECTION	NOTES:
ENG J. L. Will... DATE /25/76	PROD Roz [illegible] DATE -76	ISSUED SECTION	

ITEM NO.	DRAWING NO.	PART NO.	DESCRIPTION	QUANTITY / VARIATION	REF DESIGNATION
21		~~1300417~~	~~RES. 2.2K, 1/4W, 5%~~	~~1~~	~~R23~~
22		~~1503100~~	~~TRANSISTOR 3009B~~	~~1~~	~~Q1~~
23		1905547	I.C., 7474	6	E59, E61, E73, E74, E76, E77
24		1905576	IC. 7410	1	E58
25		1905577	IC. 7420	3	E40, E71, E72
26		1905578	IC. 7430	1	E63
27		1905585	IC. 7476	2	E56, E75
28		1909004	IC. 7402	2	E51, 38
29		1909056	IC. 74H00	1	E47
30		1909267	IC. 74H11	2	E52, E66
31		1909686	IC. 7404	5	E42, E53, E64, E57, E60
32		1909937	IC. 74153	4	E33-E36
33		1910011	IC. 7486	1	E55
34		1910155	IC. 7408	4	E31, E39, E54, E62
35		1910623	IC. 74194	3	E1, E2, E3
36		1910650	IC. 74161	10	E6, E7, E29, E30, E41, E44, E45, E50, E69, E70
37		1910655	IC. 74157	2	E26, E49
38		19-10878	IC. 7427	2	E17, E46
39		1911271	IC. 74298	3	E24, E25, E37
40		1911521	IC. 7432	1	E65
41		~~1912068~~	~~IC. 74138~~	~~1~~	~~E38~~

E.C.O. NO.

TITLE VT71 VIDEO	ASSY NO. D-UA-M8658-~~YA~~-0	SIZE B	CODE PL	NUMBER M8658-~~YA~~-0	REV. J
	SHEET 2 OF 4	INSERTION PARTS LIST DATA BASE REV			

EN-01140A-16-R276(325) DRB 125

nK

DIGITAL EQUIPMENT CORPORATION

PARTS LIST

IADE BY J. WILLIAMS ATE 11-10-75	CHECKED J. WILLIAMS DATE 2-24-76	SECTION 1
NG J. J. Williams ATE 3/25/76	PHOD Roy Carson DATE 3-25-76	ISSUED SECTION 1

EM NO.	DRAWING NO.	PART NO.	DESCRIPTION	QUANTITY/VARIATION M8658-YA	REF DESIGNATION
2		2112726	IC. 4096 RAM	10	E11-E16, E20-E23
3		1912098	IC. MH0026C	1	E68
4		2112154	IC. 3409	6	E8, E9, E18, E19, E27, E28
5		1911641	IC. 74S257	2	E4, E5
6		1910436	IC. 74123	1	E48
7		1212104-00	CONN. RT ANG. 7 PIN	1	E10
8		1302391	RES. 20K 1/4W 5%	2	R33, R34
9		~~1300229~~	~~RES. 100 OHMS, 1/4W, 5%~~	~~1~~	~~R32~~
50		1005306	CAP 6.8 Uf	6	C88,-C92, C94
51		1000021	CAP 220 Pf	1	C60
52		9008337-06	HANDLE, MAGENTA	4	
53		9006732	HANDLE, MAGENTA, EYELETS	8	
54		9009185	JUMPERS, INSULATED	13	W1-W9, W10- W13
55		1909667	IC. 74H74	1	E67
56		1909931	IC. 74H04	1	E32
57		~~1000084~~	~~CAP, 150Uf 20% 15V~~	~~1~~	~~C100~~
58		~~1103340~~	~~DIODE, ZENER 6.8V 5% 1W~~	~~1~~	~~E10~~
		1300365	RES 1K 1/4W 5%	2	R37, R38
59		~~8107278-10~~	~~TUBING, CLEAR~~	~~A/R~~	
60		1909929	I.C. 7417	1	E43
61		~~1105796~~	~~DIODE IN4004~~	~~1~~	~~D7~~
62		1000076	CAP 39uf	1	C99
63		~~1300250~~	~~RES. 150Ω 1/4W 5%~~	~~1~~	~~R39~~
64		~~1909004~~	~~I.C. 7402~~	~~1~~	~~E39~~
65		~~1300271~~	~~RES. 220Ω 1/4W 5%~~	~~1~~	~~[illegible]~~
66		1301317	RES 10 1/4W 5%	3	R35, R36, R25

NOTES:

E.C.O. NO.

"THIS DRAWING AND SPECIFICATIONS, HEREIN, ARE THE PROPERTY OF DIGITAL EQUIPMENT CORPORATION AND SHALL NOT BE REPRODUCED OR COPIED OR USED IN WHOLE OR IN PART AS THE BASIS FOR THE MANUFACTURE OR SALE OF ITEMS WITHOUT WRITTEN PERMISSION COPYRIGHT © 1976 DIGITAL EQUIPMENT CORPORATION"

TITLE VT71 VIDEO	ASSY NO. D-UA-M8658-YA-0	SIZE B	CODE PL	NUMBER M8658-YA-0	REV. J
	SHEET 3 OF 4	INSERTION PARTS LIST DATA BASE REV			

EN-01140A-16-R276(325) DRB 125

MK

DIGITAL EQUIPMENT CORPORATION
PARTS LIST

MADE BY J. WILLIAMS DATE 11-10-75	CHECKED J. WILLIAMS DATE 2-24-76	SECTION 1
ENG J. WILLIAMS DATE 3/25/76	PROD RAY CARSON DATE 3/25/76	ISSUED SECTION 1

NOTES:

ITEM NO.	DRAWING NO.	PART NO.	DESCRIPTION	QUANTITY / VARIATION M8658-YA	REF DESIGNATION
67		1300295	RES. 330 Ω 1/4W 5%	1	R40
68		1300247	RES 120Ω, 1/4W, 5%	1	R39

E.C.O. NO.

TITLE VT71 VIDEO	ASSY NO. D-UA-M8658-YA-0	SIZE B	CODE PL	NUMBER M8658-YA-0	REV. J
	SHEET 4 OF 4	INSERTION PARTS LIST DATA BASE REV			

DRB 125

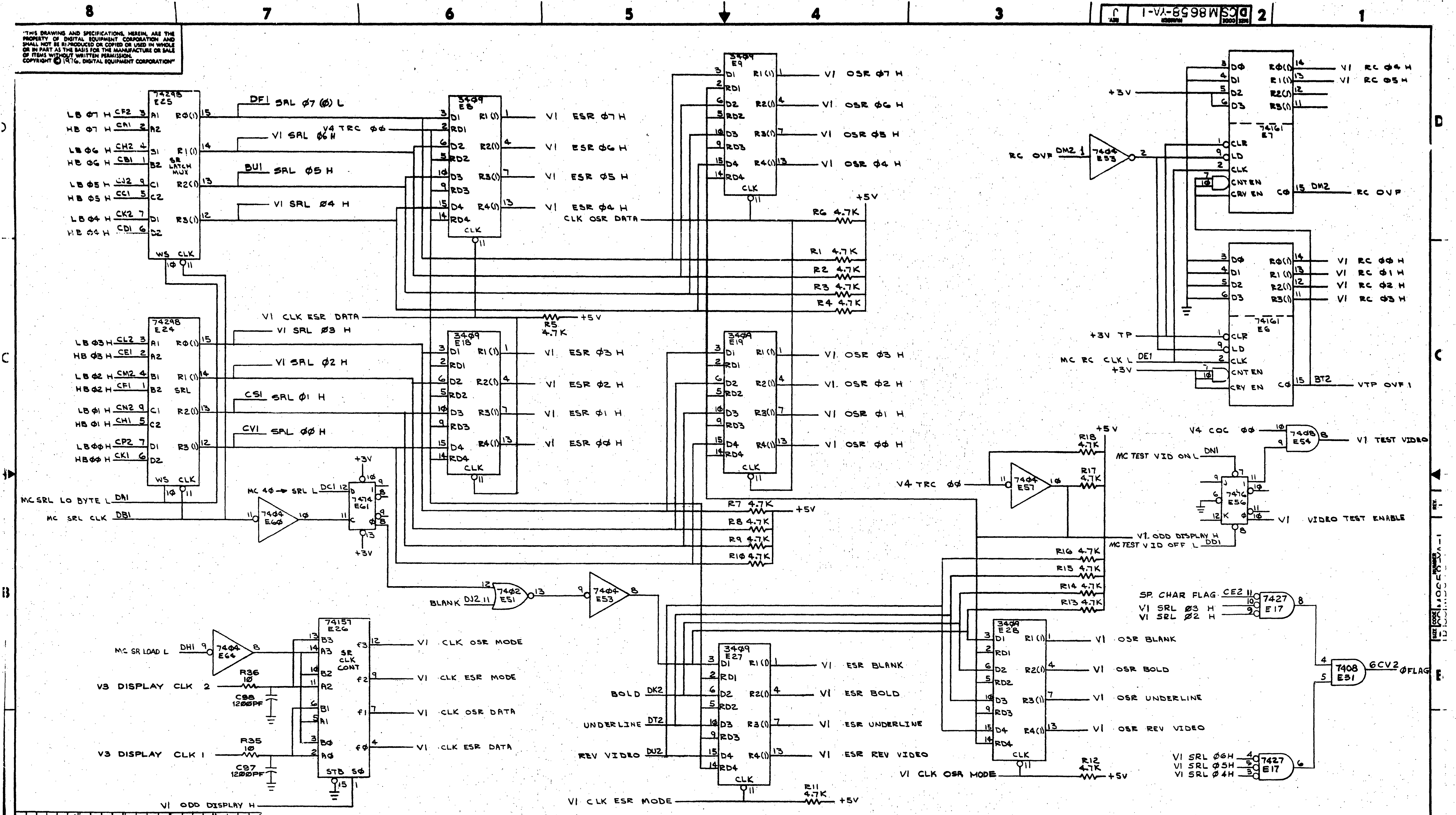

8
7
6
5
4
3
2
1
D
C
B
A
D CS M8658-YA-1 J
74298 E25
LB Ø7 H CF2
HB Ø7 H CA1
LB Ø6 H CH2
HB Ø6 H CB1
LB Ø5 H CJ2
HB Ø5 H CC1
LB Ø4 H CK2
HB Ø4 H CD1
SR LATCH MUX
DF1 SRL Ø7 (Ø) L
V4 TRC ØØ
V1 SRL Ø6 H
BU1 SRL Ø5 H
V1 SRL Ø4 H
3409 E8
V1 ESR Ø7 H
V1 ESR Ø6 H
V1 ESR Ø5 H
V1 ESR Ø4 H
CLK OSR DATA
3409 E9
V1 OSR Ø7 H
V1 OSR Ø6 H
V1 OSR Ø5 H
V1 OSR Ø4 H
R6 4.7K
+5V
R1 4.7K
R2 4.7K
R3 4.7K
R4 4.7K
V1 CLK ESR DATA
R5 4.7K
74298 E24
LB Ø3 H CL2
HB Ø3 H CE1
LB Ø2 H CM2
HB Ø2 H CF1
LB Ø1 H CN2
HB Ø1 H CH1
LB ØØ H CP2
HB ØØ H CK1
SRL
V1 SRL Ø3 H
V1 SRL Ø2 H
CS1 SRL Ø1 H
CV1 SRL ØØ H
3409 E18
V1 ESR Ø3 H
V1 ESR Ø2 H
V1 ESR Ø1 H
V1 ESR ØØ H
3409 E19
V1 OSR Ø3 H
V1 OSR Ø2 H
V1 OSR Ø1 H
V1 OSR ØØ H
MC SRL LO BYTE L DA1
MC SRL CLK DB1
7404 E60
MC 40 → SRL L DC1
7474 E61
+3V
R7 4.7K
R8 4.7K
R9 4.7K
R10 4.7K
BLANK DJ2
7402 E51
7404 E53
MC SR LOAD L DH1
7404 E64
74157 E26
SR CLK CONT
R36 10
C98 1200PF
V3 DISPLAY CLK 2
V3 DISPLAY CLK 1
R35 10
C97 1200PF
STB SØ
V1 CLK OSR MODE
V1 CLK ESR MODE
V1 CLK OSR DATA
V1 CLK ESR DATA
V1 ODD DISPLAY H
3409 E27
BOLD DK2
UNDERLINE DT2
REV VIDEO DU2
V1 ESR BLANK
V1 ESR BOLD
V1 ESR UNDERLINE
V1 ESR REV VIDEO
R11 4.7K
V1 CLK ESR MODE
3409 E28
V1 OSR BLANK
V1 OSR BOLD
V1 OSR UNDERLINE
V1 OSR REV VIDEO
R12 4.7K
V1 CLK OSR MODE
R13 4.7K
R14 4.7K
R15 4.7K
R16 4.7K
RC OVF DM2
7404 E53
74161 E7
V1 RC Ø4 H
V1 RC Ø5 H
15 DM2 RC OVF
74161 E6
V1 RC ØØ H
V1 RC Ø1 H
V1 RC Ø2 H
V1 RC Ø3 H
+3V TP
MC RC CLK L DE1
BT2 VTP OVF 1
R18 4.7K
R17 4.7K
MC TEST VID ON L DN1
V4 COC ØØ
7408 E54
V1 TEST VIDEO
V4 TRC ØØ
7404 E57
7476 E56
V1 VIDEO TEST ENABLE
V1 ODD DISPLAY H
MC TEST VID OFF L DD1
SP. CHAR FLAG CE2
V1 SRL Ø3 H
V1 SRL Ø2 H
7427 E17
7408 E31
6CV2 ØFLAG
V1 SRL Ø6H
V1 SRL Ø5H
V1 SRL Ø4H
7427 E17

REVISIONS			
CHK	CHANGE NO.		REV.
	M8658-00001	GP Verrier 15-JUN-76	C
	J. WILLIAMS	R Hart 6-27-76	
	M8658-00002	P. Groome 7 SEPT 76	D
	J. WILLIAMS	10-20-76	
G.P.	M8658-YA-00001	D Zwicker 5 AUG 77	F
	J. WILLIAMS		
	M8658-YA-00002	STEVEHIMLE 19 MAR 78	H
	D. O'CONNELL		
	M8658-YA-MK003	H Densmore 10-5-78	J
	D. O'CONNELL		

DEC FORM NO.
D 101-D

DRN. K.	1-14-76	FIRST USED ON M8658	digital
CHK'D J. Williams	7/23/76	TITLE	
ENG. J. Williams	3/25/76	VT71 VIDEO (V1)	
PROJ. ENG. J. Williams	3/25/76		
PROD.	3-25-76		
NEXT HIGHER ASSY. D-UA-M8658-YA-Ø		SIZE D / CODE CS / NUMBER M8658-YA-1	REV. J.
SCALE			
SHEET 1 OF 5		DIST.	

MK 1

73

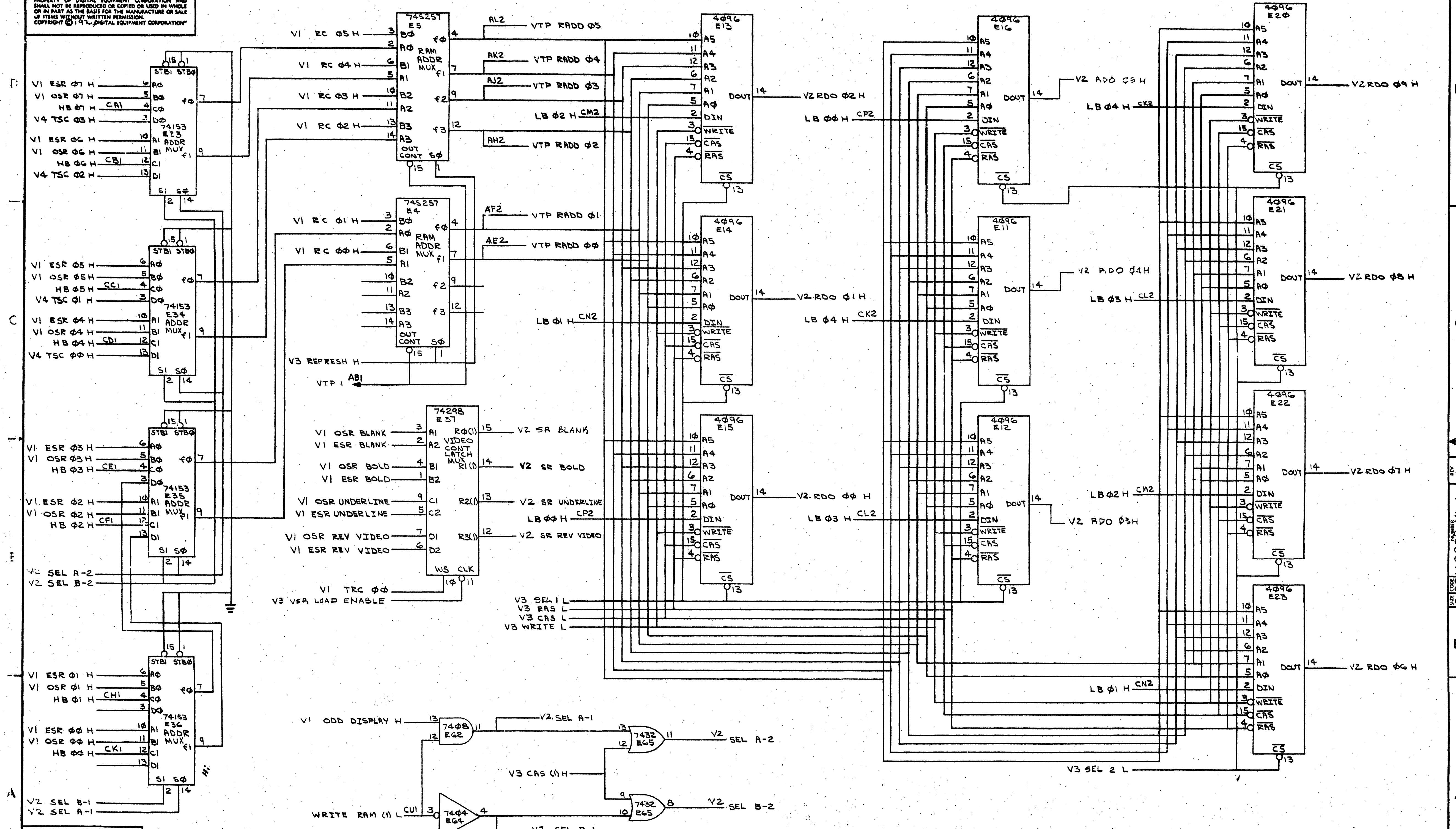
8
7
6
5
4
3
2
1
D
C
B
A
74S257 E5 RAM ADDR MUX
74S257 E4 RAM ADDR MUX
74153 E23 ADDR MUX
74153 E34 ADDR MUX
74153 E35 ADDR MUX
74153 E36 ADDR MUX
74298 E37 VIDEO CONT LATCH MUX
4096 E13
4096 E14
4096 E15
4096 E16
4096 E11
4096 E12
4096 E20
4096 E21
4096 E22
4096 E23
V1 ESR Ø7 H
V1 OSR Ø7 H
HB Ø7 H
V4 TSC Ø3 H
V1 ESR Ø6 H
V1 OSR Ø6 H
HB Ø6 H
V4 TSC Ø2 H
V1 ESR Ø5 H
V1 OSR Ø5 H
HB Ø5 H
V4 TSC Ø1 H
V1 ESR Ø4 H
V1 OSR Ø4 H
HB Ø4 H
V4 TSC ØØ H
V1 ESR Ø3 H
V1 OSR Ø3 H
HB Ø3 H
V1 ESR Ø2 H
V1 OSR Ø2 H
HB Ø2 H
V2 SEL A-2
V2 SEL B-2
V1 ESR Ø1 H
V1 OSR Ø1 H
HB Ø1 H
V1 ESR ØØ H
V1 OSR ØØ H
HB ØØ H
V2 SEL B-1
V2 SEL A-1
V1 RC Ø5 H
V1 RC Ø4 H
V1 RC Ø3 H
V1 RC Ø2 H
V1 RC Ø1 H
V1 RC ØØ H
V3 REFRESH H
VTP 1
AB1
AL2
AK2
AJ2
AH2
AF2
AE2
VTP RADD Ø5
VTP RADD Ø4
VTP RADD Ø3
VTP RADD Ø2
VTP RADD Ø1
VTP RADD ØØ
LB Ø2 H
LB ØØ H
LB Ø1 H
LB Ø4 H
LB Ø3 H
CM2
CP2
CN2
CK2
CL2
V2 RDO Ø2 H
V2 RDO Ø1 H
V2 RDO ØØ H
V2 RDO Ø5 H
V2 RDO Ø4 H
V2 RDO Ø3 H
V2 RDO Ø9 H
V2 RDO Ø8 H
V2 RDO Ø7 H
V2 RDO Ø6 H
V1 OSR BLANK
V1 ESR BLANK
V1 OSR BOLD
V1 ESR BOLD
V1 OSR UNDERLINE
V1 ESR UNDERLINE
V1 OSR REV VIDEO
V1 ESR REV VIDEO
V1 TRC ØØ
V3 VSR LOAD ENABLE
V2 SR BLANK
V2 SR BOLD
V2 SR UNDERLINE
V2 SR REV VIDEO
V3 SEL 1 L
V3 RAS L
V3 CAS L
V3 WRITE L
V3 SEL 2 L
V1 ODD DISPLAY H
7408 E62
V2 SEL A-1
7432 E65
V2 SEL A-2
V3 CAS (1) H
WRITE RAM (1) L
CU1
7404 E64
V2 SEL B-1
7432 E65
V2 SEL B-2
CA1
CB1
CC1
CD1
CE1
CF1
CH1
CK1
DOUT
DIN
WRITE
CAS
RAS
CS
REVISIONS
CHK
CHANGE NO.
REV.

TITLE VT71 VIDEO (V2)	SIZE D	CODE CS	NUMBER M8658-YA-1	REV. J
SCALE	SHEET 2 OF 5	DIST.		

74

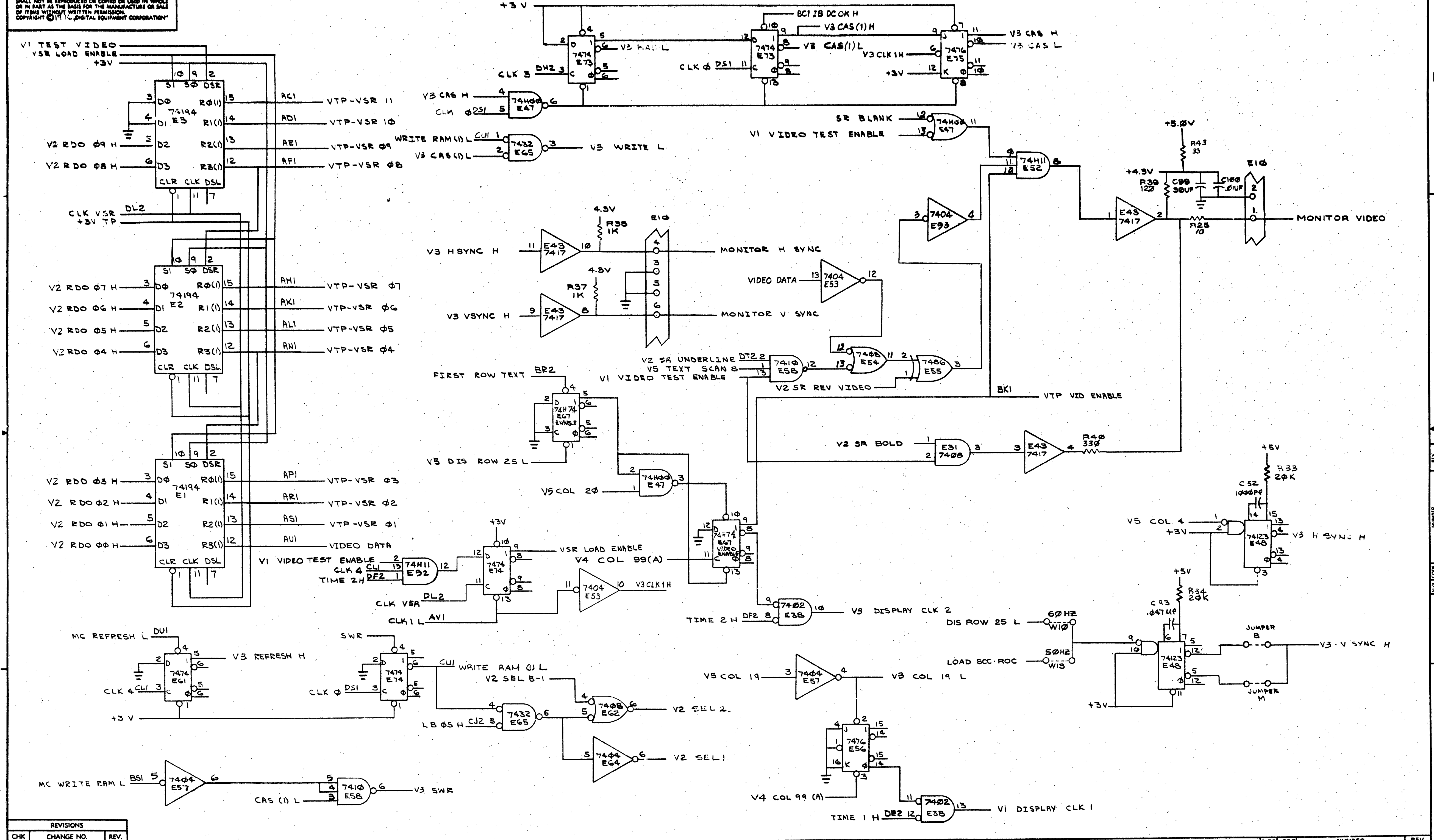
V1 TEST VIDEO
VSR LOAD ENABLE
+3V
74194 E3
V2 RDO Ø9 H
V2 RDO Ø8 H
AC1 VTP-VSR 11
AD1 VTP-VSR 1Ø
AE1 VTP-VSR Ø9
AF1 VTP-VSR Ø8
CLK VSR DL2
+3V TP
74194 E2
V2 RDO Ø7 H
V2 RDO Ø6 H
V2 RDO Ø5 H
V2 RDO Ø4 H
AH1 VTP-VSR Ø7
AK1 VTP-VSR Ø6
AL1 VTP-VSR Ø5
AN1 VTP-VSR Ø4
74194 E1
V2 RDO Ø3 H
V2 RDO Ø2 H
V2 RDO Ø1 H
V2 RDO ØØ H
AP1 VTP-VSR Ø3
AR1 VTP-VSR Ø2
AS1 VTP-VSR Ø1
AU1 VIDEO DATA
MC REFRESH L DU1
7474 E61
V3 REFRESH H
CLK 4 CL1
MC WRITE RAM L BS1
7404 E57
CAS (1) L
7410 E58
V3 SWR
+3V
CLK 3 DH2
7474 E73
V3 HAS L
BC1 JB DC OK H
V3 CAS (1) H
V3 CAS (1) L
CLK Ø DS1
7474 E73
V3 CLK 1H
7476 E75
V3 CAS H
V3 CAS L
V3 CAS H
CLK Ø DS1
74HØØ E47
WRITE RAM (1) L CU1
V3 CAS (1) L
7432 E65
V3 WRITE L
4.3V R38 1K
E1Ø
V3 HSYNC H
E43 7417
MONITOR H SYNC
R37 1K
V3 VSYNC H
MONITOR V SYNC
SR BLANK
V1 VIDEO TEST ENABLE
74HØØ E47
74H11 E52
+5.ØV
R43 33
+4.3V
R39 12Ø
C99 30UF
C100 .01UF
E43 7417
R25 10
MONITOR VIDEO
7404 E93
VIDEO DATA
7404 E53
V2 SR UNDERLINE DT2
V5 TEXT SCAN 8
V1 VIDEO TEST ENABLE
7410 E58
7408 E54
7486 E55
V2 SR REV VIDEO
BK1 VTP VID ENABLE
FIRST ROW TEXT BR2
74H74 E67 ENABLE
V5 DIS ROW 25 L
74HØØ E47
V5 COL 2Ø
74H74 E67 VIDEO ENABLE
V2 SR BOLD
E31 7408
E43 7417
R40 330
+5V
R33 2ØK
C52 1000PF
V5 COL 4
+3V
74123 E48
V3 H SYNC H
V1 VIDEO TEST ENABLE
CLK 4 CL1
TIME 2H DF2
74H11 E52
7474 E74
VSR LOAD ENABLE
V4 COL 99 (A)
CLK VSR DL2
CLK 1 L AV1
7404 E53
V3CLK1H
TIME 2 H DF2
7402 E38
V3 DISPLAY CLK 2
DIS ROW 25 L
60HZ W10
50HZ W13
LOAD SCC-ROC
C93 .047UF
R34 2ØK
74123 E48
JUMPER B
JUMPER M
V3 V SYNC H
SWR
7474 E74
CLK Ø DS1
WRITE RAM (1) L CU1
V2 SEL B-1
LB Ø5 H CJ2
7432 E65
7408 E62
V2 SEL 2
7404 E64
V2 SEL 1
V5 COL 19
7404 E57
V3 COL 19 L
7476 E56
V4 COL 99 (A)
TIME 1 H DE2
7402 E38
V1 DISPLAY CLK 1

REVISIONS		
CHK	CHANGE NO.	REV.

TITLE VT71 VIDEO (V3)
SIZE D
CODE CS
NUMBER M8658-YA-1
REV. J
SCALE
SHEET 3 OF 5
DIST.

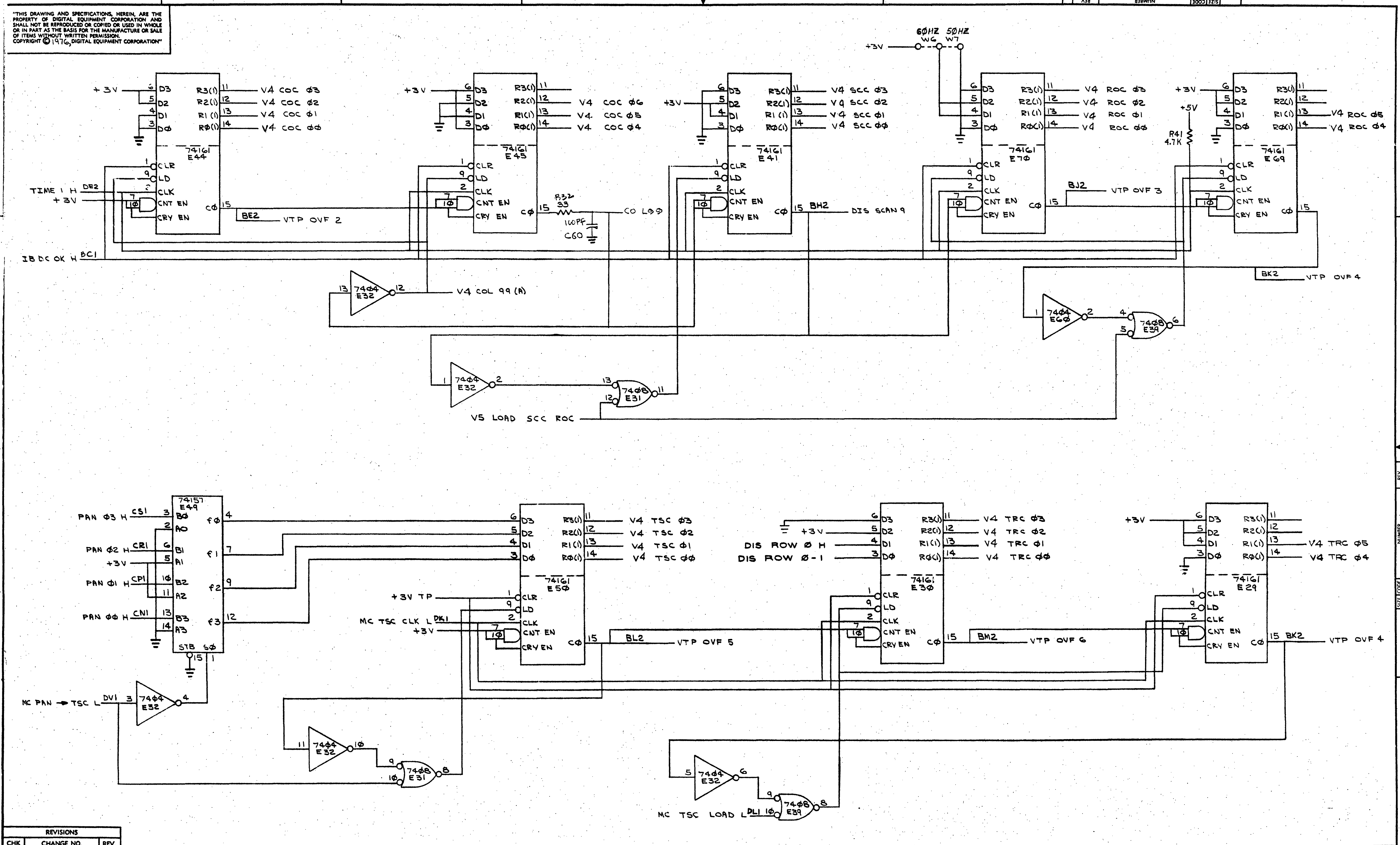
8
7
6
5
4
3
2
1
D
C
B
A
+3V
60HZ
50HZ
W6
W7
74161
E44
E45
E41
E70
E69
E50
E30
E29
D3
D2
D1
DØ
R3(1)
R2(1)
R1(1)
RØ(1)
CLR
LD
CLK
CNT EN
CRY EN
CØ
V4 COC Ø3
V4 COC Ø2
V4 COC Ø1
V4 COC ØØ
V4 COC Ø6
V4 COC Ø5
V4 COC Ø4
V4 SCC Ø3
V4 SCC Ø2
V4 SCC Ø1
V4 SCC ØØ
V4 ROC Ø3
V4 ROC Ø2
V4 ROC Ø1
V4 ROC ØØ
V4 ROC Ø5
V4 ROC Ø4
+5V
R41
4.7K
TIME 1 H
DE2
IB DC OK H
BC1
BE2
VTP OVF 2
R32
33
100PF
C60
CO L99
BH2
DIS SCAN 9
BJ2
VTP OVF 3
BK2
VTP OVF 4
7404
E32
E60
7408
E39
E31
V4 COL 99 (A)
V5 LOAD SCC ROC
74157
E49
PAN Ø3 H
CS1
PAN Ø2 H
CR1
PAN Ø1 H
CP1
PAN ØØ H
CN1
BØ
AØ
B1
A1
B2
A2
B3
A3
STB
SØ
fØ
f1
f2
f3
V4 TSC Ø3
V4 TSC Ø2
V4 TSC Ø1
V4 TSC ØØ
+3V TP
MC TSC CLK L
DK1
BL2
VTP OVF 5
DIS ROW Ø H
DIS ROW Ø-1
V4 TRC Ø3
V4 TRC Ø2
V4 TRC Ø1
V4 TRC ØØ
BM2
VTP OVF 6
V4 TRC Ø5
V4 TRC Ø4
MC PAN → TSC L
DV1
MC TSC LOAD L
DL1

REVISIONS		
CHK	CHANGE NO.	REV.

TITLE VT71 VIDEO (V4)

SIZE	CODE	NUMBER	REV.
D	CS	M8658-YA-1	J

SCALE
SHEET 4 OF 5
DIST.

DEC FORM NO. DRD 138

MK 1

76

"THIS DRAWING AND SPECIFICATIONS, HEREIN, ARE THE PROPERTY OF DIGITAL EQUIPMENT CORPORATION AND SHALL NOT BE REPRODUCED OR COPIED OR USED IN WHOLE OR IN PART AS THE BASIS FOR THE MANUFACTURE OR SALE OF ITEMS WITHOUT WRITTEN PERMISSION. COPYRIGHT © 1976, DIGITAL EQUIPMENT CORPORATION"

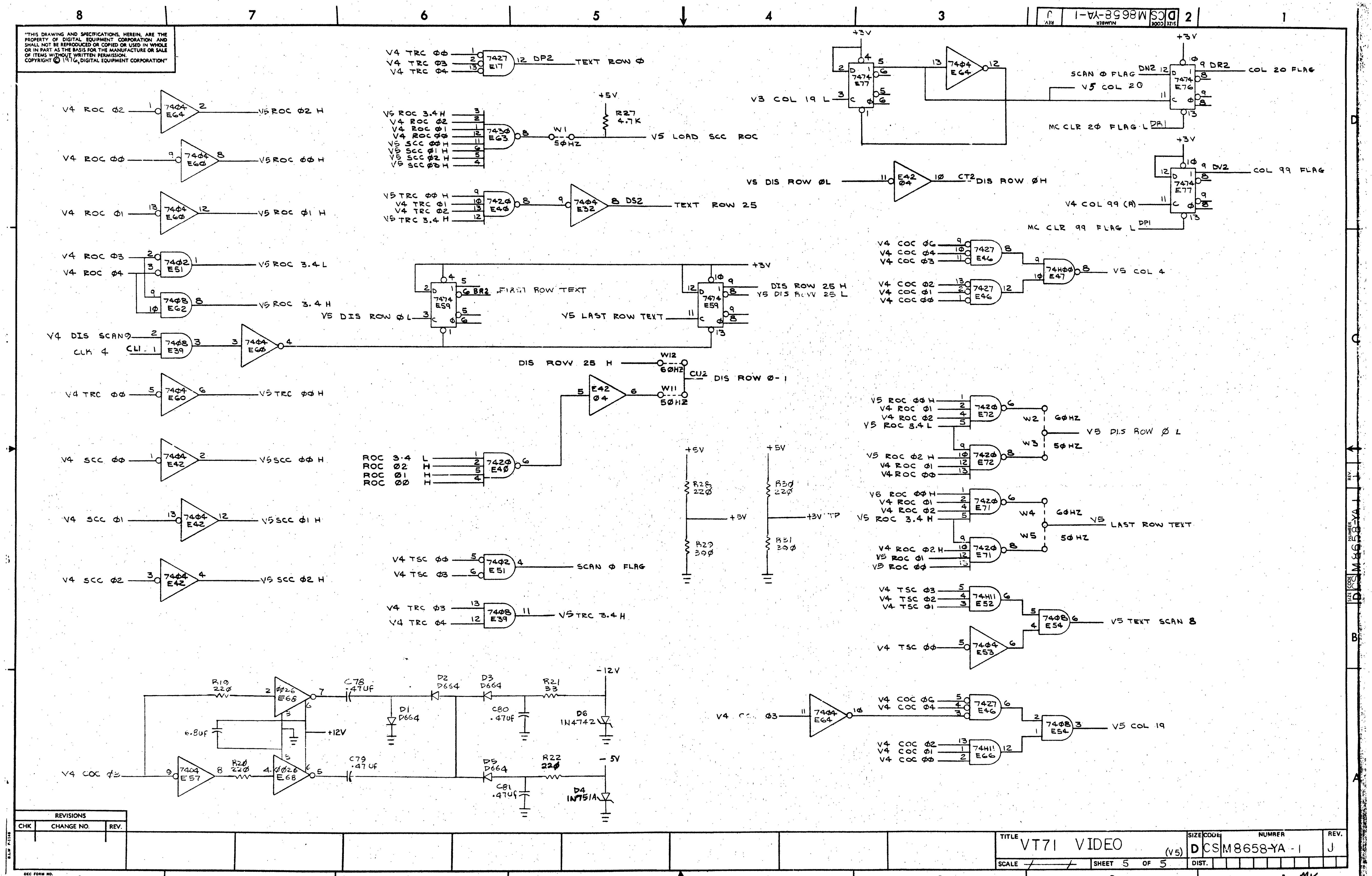

V4 ROC Ø2 — 7404 E64 — V5 ROC Ø2 H
V4 ROC ØØ — 7404 E60 — V5 ROC ØØ H
V4 ROC Ø1 — 7404 E60 — V5 ROC Ø1 H
V4 ROC Ø3
V4 ROC Ø4
7402 E51 — V5 ROC 3.4 L
7408 E62 — V5 ROC 3.4 H
V4 DIS SCAN Ø
CLK 4
CLI
7408 E39
7404 E60
V4 TRC ØØ — 7404 E60 — V5 TRC ØØ H
V4 SCC ØØ — 7404 E42 — V5 SCC ØØ H
V4 SCC Ø1 — 7404 E42 — V5 SCC Ø1 H
V4 SCC Ø2 — 7404 E42 — V5 SCC Ø2 H
V4 TRC ØØ
V4 TRC Ø3
V4 TRC Ø4
7427 E17 — DP2 — TEXT ROW Ø
V5 ROC 3.4 H
V4 ROC Ø2
V4 ROC Ø1
V4 ROC ØØ
V5 SCC ØØ H
V5 SCC Ø1 H
V5 SCC Ø2 H
V5 SCC ØØ H
7430 E63
W1 5ØHZ
+5V
R27 4.7K
V5 LOAD SCC ROC
V5 TRC ØØ H
V4 TRC Ø1
V4 TRC Ø2
V5 TRC 3.4 H
7420 E40
7404 E32 — DS2 — TEXT ROW 25
7474 E59
BR2 FIRST ROW TEXT
V5 DIS ROW Ø L
V5 LAST ROW TEXT
7474 E59
+3V
DIS ROW 25 H
V5 DIS ROW 25 L
DIS ROW 25 H
W12 6ØHZ
CU2 DIS ROW Ø-1
W11 5ØHZ
E42 Ø4
ROC 3.4 L
ROC Ø2 H
ROC Ø1 H
ROC ØØ H
7420 E40
V4 TSC ØØ
V4 TSC Ø3
7402 E51 — SCAN Ø FLAG
V4 TRC Ø3
V4 TRC Ø4
7408 E39 — V5 TRC 3.4 H
+5V
R28 22Ø
+3V
R29 39Ø
+5V
R3Ø 22Ø
+3V TP
R31 39Ø
R19 22Ø
7Ø26 E68
C78 .47UF
D2 D664
D3 D664
R21 33
-12V
D1 D664
C80 .47UF
D6 1N4742
6.8uF
+12V
V4 COC Ø3
7404 E57
R20 22Ø
7Ø26 E68
C79 .47UF
D5 D664
R22 22Ø
-5V
C81 .47UF
D4 1N751A
+3V
7474 E77
7404 E64
V3 COL 19 L
SCAN Ø FLAG
V5 COL 20
DN2
7474 E76
DR2 — COL 20 FLAG
MC CLR 20 FLAG L — DR1
+3V
7474 E77
DV2 — COL 99 FLAG
V4 COL 99 (A)
MC CLR 99 FLAG L — DP1
V5 DIS ROW ØL — E42 Ø4 — CT2 — DIS ROW ØH
V4 COC Ø6
V4 COC Ø4
V4 COC Ø3
7427 E46
V4 COC Ø2
V4 COC Ø1
V4 COC ØØ
7427 E46
74HØØ E47 — V5 COL 4
V5 ROC ØØ H
V4 ROC Ø1
V4 ROC Ø2
V5 ROC 3.4 L
7420 E72
W2 6ØHZ
V5 DIS ROW Ø L
W3 5ØHZ
V5 ROC Ø2 H
V4 ROC Ø1
V4 ROC ØØ
7420 E72
V6 ROC ØØ H
V4 ROC Ø1
V4 ROC Ø2
V5 ROC 3.4 H
7420 E71
W4 6ØHZ
V5 LAST ROW TEXT
W5 5ØHZ
V4 ROC Ø2 H
V5 ROC Ø1
V5 ROC ØØ
7420 E71
V4 TSC Ø3
V4 TSC Ø2
V4 TSC Ø1
74H11 E52
7408 E54 — V5 TEXT SCAN 8
V4 TSC ØØ — 7404 E53
V4 COC Ø3 — 7404 E64
V4 COC Ø6
V4 COC Ø4
7427 E46
V4 COC Ø2
V4 COC Ø1
V4 COC ØØ
74H11 E66
7408 E54 — V5 COL 19
D CS M8658-YA-1 J

CHK	CHANGE NO.	REV.

REVISIONS

TITLE VT71 VIDEO (V5)

SIZE D CODE CS NUMBER M8658-YA-1 REV. J

SCALE — SHEET 5 OF 5 DIST.

DEC FORM NO. DWD 138

MK

DIGITAL EQUIPMENT CORPORATION

MAYNARD, MASSACHUSETTS

ENGINEERING SPECIFICATION DATE 2/24/76

TITLE M8658YA Video Module

REVISIONS

REV	DESCRIPTION	CHG NO	ORIG	DATE	APPD BY	DATE
-	M8658 SPECIFICATION	-	JLW	2/24/76		
A	M8658YA SPECIFICATION	1	JLW	2/3/77		

ENG	APPD	SIZE	CODE	NUMBER	REV
Dan O'Connell	Dan O'Connell	A	SP	M8658YA-8	A

DEC FORM NO. DRA 107A

SHEET 1 OF 5

ENGINEERING SPECIFICATION

CONTINUATION SHEET

TITLE M8658YA Video Module

1.1 The 8658YA is a video control interface between the VT71 Display Monitor and the M8567YA Control Module.

1.2 The 8658YA receives, from the M8657YA, 16 bits of address and data, control and timing. It transmits all required status information to the M8657YA; it also controls all timing and video data for the VT71 Display Monitor.

1.3 POWER REQUIREMENTS:

+5VDC AT 3.2A MAX/2.0A TYP.
+12VDC AT 0.6A MAX/0.4A TYP.

2.1 The module has jumper selectable timing for 50 Hz or 60H; it is also jumper selectable for either a Motorola or Ball Brothers Display Monitor.

3.0 JUMPER SELECTION:

60 Hz		50 Hz		Motorola	Ball
1 = OUT	10 = IN	1 = IN	10 = OUT	B = OUT	B = IN
2 = IN	11 = OUT	2 = OUT	11 = IN	M = IN	M = OUT
3 = OUT	12 = IN	3 = IN	12 = OUT		
4 = IN	13 = OUT	4 = OUT	13 = IN		
5 = OUT		5 = IN			
6 = IN		6 = OUT			
7 = OUT		7 = IN			

4.0 FINGER PINNING:

+5VDC	AA2	GND	AT1	VTP RADD 00	AE2
	BA2		BC2	VTP RADD 01	AF2
	CA2		BJ1	VTP RADD 02	AH2
	DA2		BM1	VTP RADD 03	AJ2
			BT1	VTP RADD 04	AK2
+12VDC	AD2		CC2	VTP RADD 05	AL2
	BD2		CJ1	VTP OVF 2	BE2
	CD2		CM1	COL 99	BF2
	DD2		CT1	DIS. SCAN 9	BH2
			DC2	VTP OVF 3	BJ2
GND	AC2		DJ1	VTP OVF 4	BK2
	AJ1		DM1	VTP OVF 5	BL2
	AM1		DT1	VTP OVF 6	BM2

SIZE	CODE	NUMBER	REV
A	SP	M8658YA-8	A

DEC FORM NO EN-01022-16-N370-(381) DRA 108

SHEET 2 OF 5

ENGINEERING SPECIFICATION

CONTINUATION SHEET

TITLE M8658YA Video Module

VTP OVF 7	BN2	COL 20 FLAG	DR2	HB 04H	CD1
FIRST ROW TEXT	BR2	TEXT ROW 25	DS2	HB 03H	CE1
VTP OVF 1	BT2	UNDERLINE	DT2	HB 02H	CF1
SP. CHAR. FLAG	CE2	REV. VIDEO	DU2	HB 01H	CH1
LB 07H	CF2	COL 99 FLAG	DV2	HB 00H	CK1
LB 06H	CH2	VTP 1	AB1	CLK 4	CL1
LB 05H	CJ2	VTP VSR 11	AC1	PAN 00 H	CN1
LB 04H	CK2	VTP VSR 10	AD1	PAN 01H	CP1
LB 03H	CL2	VTP VSR 09	AE1	PAN 02H	CR1
LB 02H	CM2	VTP VSR 08	AF1	PAN 03H	CS1
LB 01H	CN2	VTP VSR 07	AH1	WRITE RAM(1) L	CU1
LB 00H	CP2	VTP VSR 06	AK1	SRL 00H	CV1
	CR2	VTP VSR 05	AL1	MC SRL LOBYTE L	DA1
SPL 01H	CS2	VTP VSR 04	AN1	MC SRL CLK	DB1
DIS. ROW 0H	CT2	VTP VSR 03	AP1	MC 40→SRL L	DC1
DIS. ROW 25H	CU2	VTP VSR 02	AR1	MC T. VID.OFF L	DD1
0 FLAG	CV2	VIDEO DATA	AU1	MC CLK RC L	DE1
TIME 1 H	DE2	CLK 1 L	AV1	SRL 07(0) L	DF1
TIME 2 H	DF2	IB DCOK H	BC1	MC LOAD SR	DH1
CLK3	DH2	VTP VID. ENABLE	BK1	MC TSC CLK	DK1
BLANK	DJ2	MC WRITE RAM L	BS1	MC TSC LOAD	DL1
BOLD	DK2	SRL 05 H	BU1	MC T. VID.ON L	DN1
CLK VSR	DL2	+3V TP	BV1	MC CLR 99 FLAG	DP1
RC OVF	DM2	HB 07H	CA1	MC CLR 20 FLAG	DR1
	DN2	HB 06H	CB1	CLK 0	DS1
TEXT ROW 0	DP2	HB 05H	CC1	MC REFRESH L	DU1
				MC PAN→TSC 1	DV1

SIZE	CODE	NUMBER	REV
A	SP	M8658YA-8	A

DEC FORM NO EN-01022-16-N370-(381) DRA 108

SHEET 3 OF 5

ENGINEERING SPECIFICATION

CONTINUATION SHEET

TITLE M8658YA Video Module

5.0 TIMING DIAGRAMS

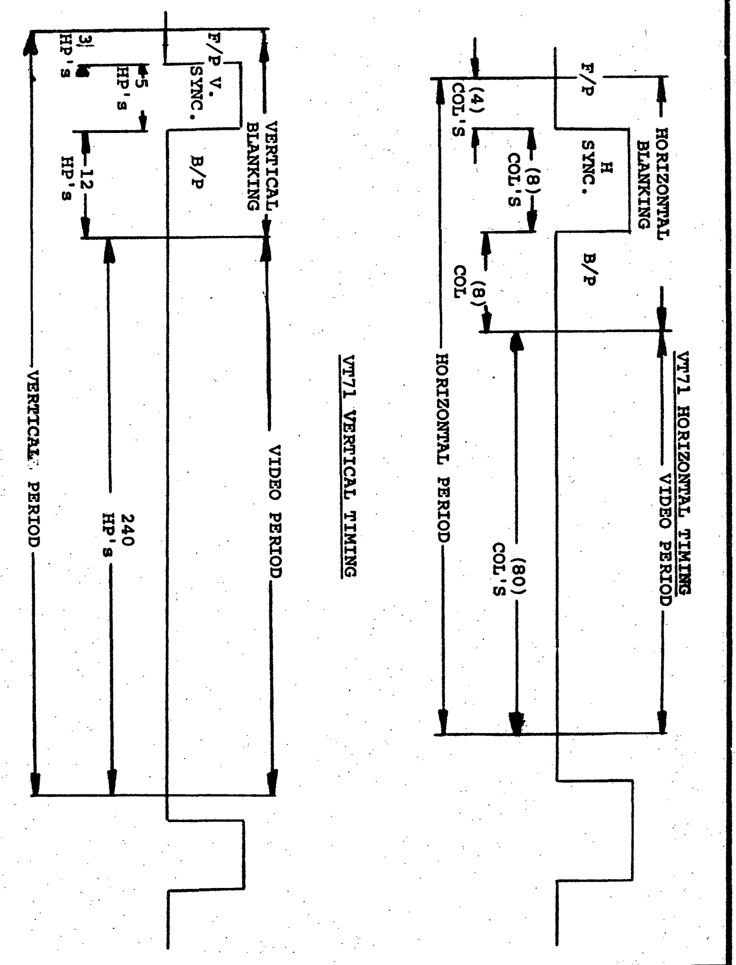

SIZE	CODE	NUMBER	REV
A	SP	M8658YA-8	A

DEC FORM NO EN-01022-16-N370-(381) DRA 108

SHEET 4 OF 5

ENGINEERING SPECIFICATION **CONTINUATION SHEET**

TITLE M8658YA Video Module

NOTE:

1. F/P = FRONT PORCH on H SYNC./V SYNC. DELAY.
2. B/P = BACK PORCH on H SCAN /V SCAN DELAY.
3. HP = HORIZONTAL PERIOD = (64.1 USEC.)
4. COL = CHARACTER TIME. = (641 NSEC).
5. H SYNC=HORIZONTAL SYNC. SIG. = (5.1 USEC).
6. V SYNC = VERTICAL SYNC. SIG. = (320 USEC).
7. HORIZONTAL B/P = (5.1 USEC.)
8. VERTICAL B/P = (769.2 USEC)
9. HORIZONTAL F/P = (2.6 USEC).
10. VERTICAL F/P 60 HZ. = (192.3 USEC.).
11. VERTICAL F/P 50 Hz. = (192.3 USEC. + 52 HP's = 3.3 MSEC).
12. INVERT VSYNC FOR BALL BROS.

SIZE	CODE	NUMBER	REV
A	SP	M8658YA-8	A

SHEET 5 OF 5

79

DEC FORM NO EN-01022-16-N370-(381)
DRA 108

D UA M8659-0-0 *

COMPONENT SIDE VIEW

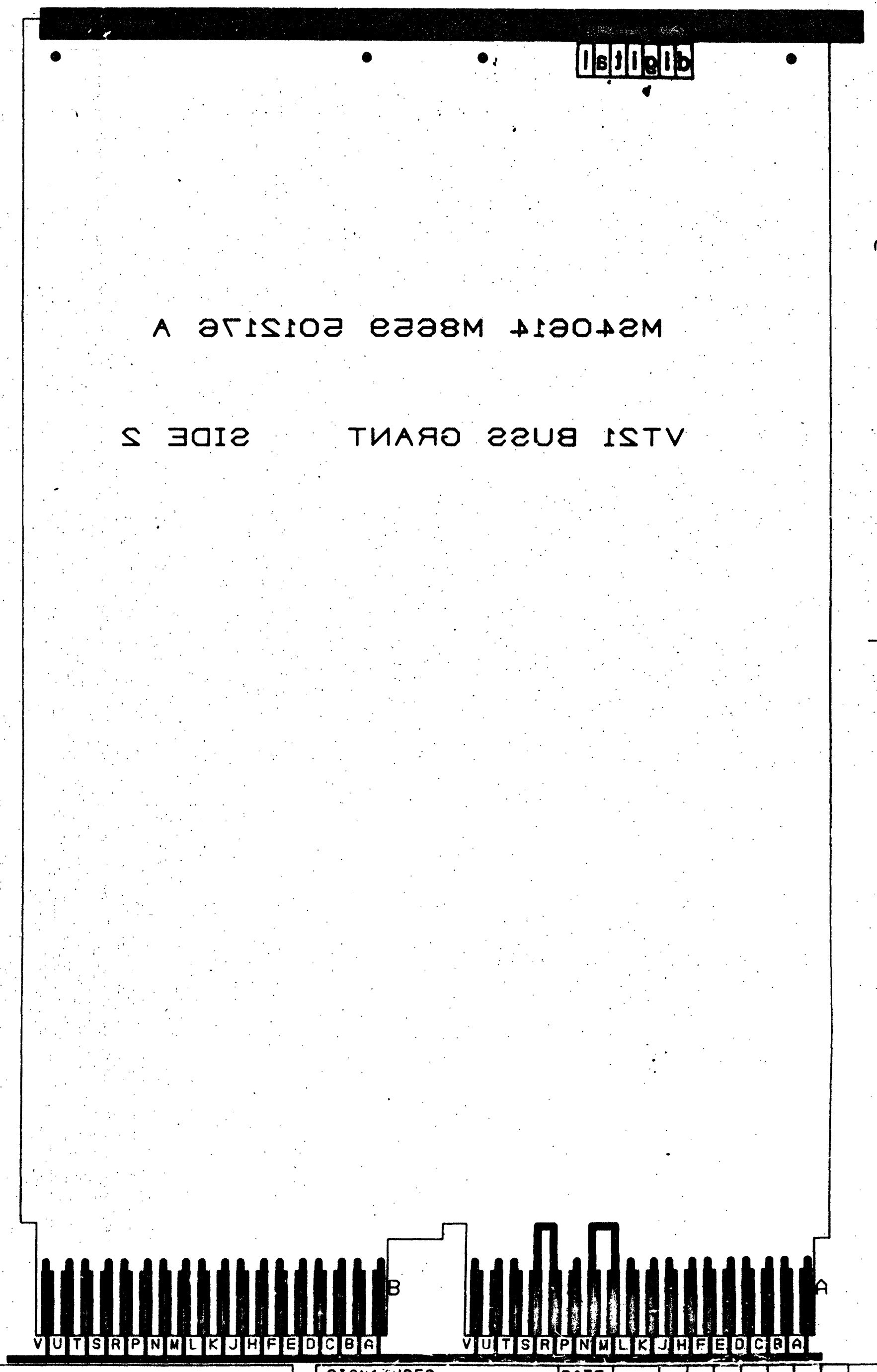
digital
MS40614 M8659 5012176 A
VT21 BUSS GRANT SIDE 2
B
A
V U T S R P N M L K J H F E D C B A
V U T S R P N M L K J H F E D C B A

NOTES: THERE ARE NO HOLES OR COMPONENTS ON THIS BOARD.

CHK	CHANGE NO	REV

ETCH REV. A
P.C. DESIGN DATA BASE REV. A

SIGNATURES		DATE
DRN.	E. Hetzewski	3-29-76
CHK'D.	E. Hetzewski	3-29-76
ENG.	Rich Hartz	4-1-76
PROJ.ENG.	Rich Hartz	4-1-76
PROD.		4-1-76
SCALE	2/1	
SHT.	1 OF 2	
NEXT HIGHER ASSY.		

digital

TITLE
VT71 BUS GRANT

SIZE	CODE	NUMBER	REV
D	UA	M8659-0-0	*

MS# 40614

80

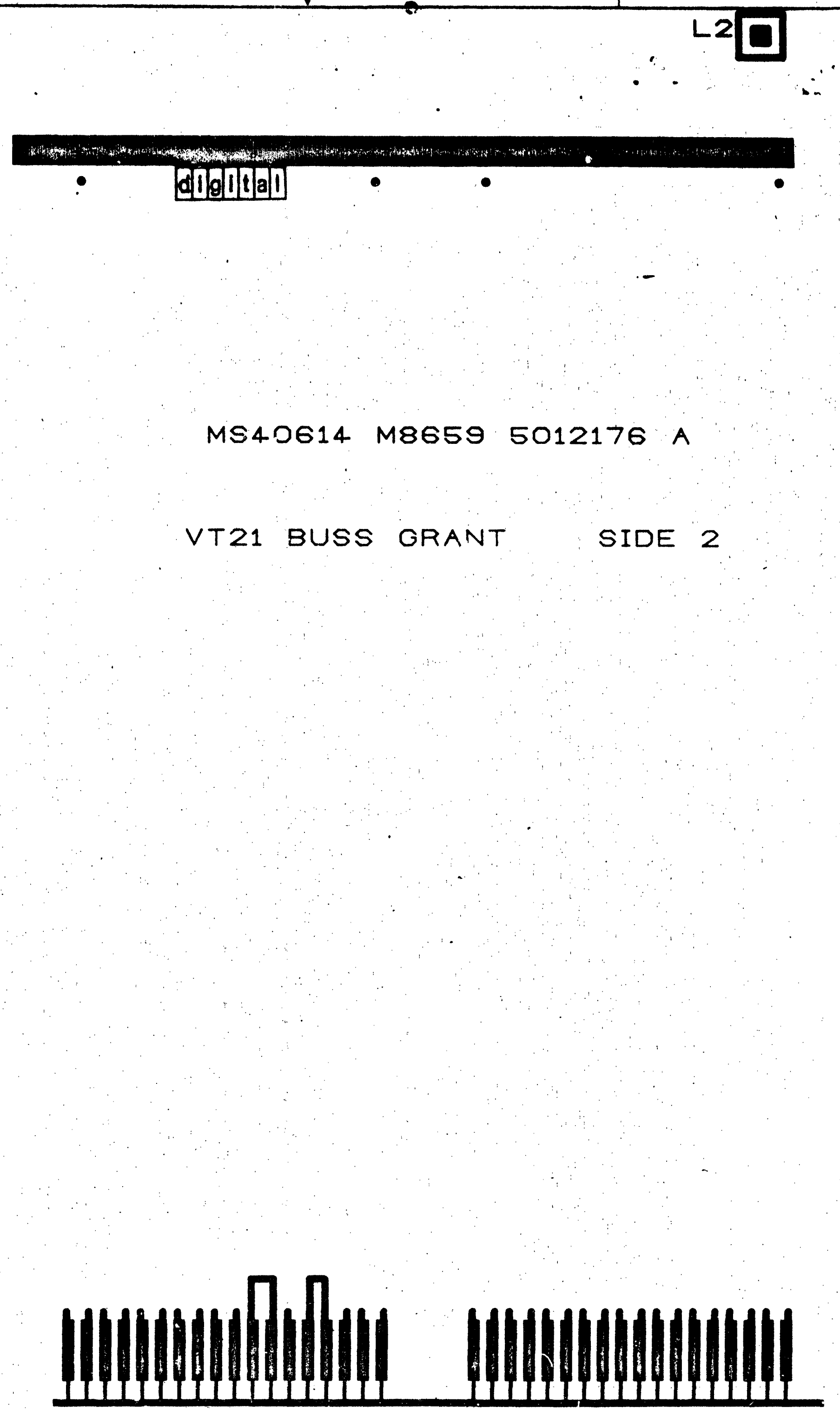
L2
digital
MS40614 M8659 5012176 A
VT21 BUSS GRANT SIDE 2

TITLE VT71 BUSS GRANT	SIZE D	CODE UA	NUMBER M8659-0-0	REV. *
SCALE 2/1	SHEET 2 OF 2	DIST.		

81

DIGITAL EQUIPMENT CORPORATION

PARTS LIST

MADE BY R. KOPPENAL DATE 3-22-76	CHECKED R. Koppenal DATE 3-22-76	SECTION 1
ENG DATE 4-1-76	PROD DATE 4-1-76	ISSUED SECTION 1

QUANTITY/VARIATION

NOTES:

ITEM NO.	DRAWING NO.	PART NO.	DESCRIPTION	M8659-0-0											REF DESIGNATION
1	D-MD-5012176-0-0	5012176	ETCH BOARD	1											
2		9008337-06	HANDLE	2											
3		9006732	EYELET	4											

E.C.O. NO.

TITLE V171 BUS GRANT BOARD	ASSY NO. D-UA-M8659-0-0 SHEET 1 OF 1	SIZE B	CODE PL	NUMBER M8659-0-0	REV. *
		INSERTION PARTS LIST DATA BASE REV			

EN-01140-16-N1075-(325) DRB 125

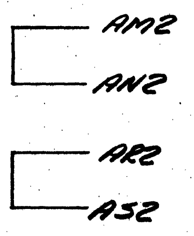

REVISIONS		
CHK	CHANGE NO.	REV.

FIRST USED ON OPTION/MODEL VT71	QTY.	~~DESCRIPTION~~	~~PART NO.~~ / ITEM NO.
	PARTS LIST		

UNLESS OTHERWISE SPECIFIED
DIMENSION IN INCHES
TOLERANCES

DECIMALS	ANGLES
.xxx = .005 .xx = .02 .x = .1	±0° 30'

REMOVE BURRS AND BREAK SHARP CORNERS SURFACE QUALITY √

MATERIAL

FINISH

		DATE
DRN.	Bob Ellard	2/13/76
CHK'D.	R. Koppenol	3-22-76
ENG.	Rich Hart	4/1/76
PROJ. ENG.	Rich Hart	4/1/76
PROD.	[illegible]	4-1-76

digital EQUIPMENT CORPORATION
MAYNARD, MASSACHUSETTS

TITLE
VT71 BUS
GRANT BOARD

NEXT HIGHER ASSY.
B-DD-M8659-0

SIZE	CODE	NUMBER	REV.
C	CS	M8659-0-1	*

SCALE NONE
SHEET 1 OF 1
DIST.

DEC FORM NO. DRC 100-R

WIRE TABLE

ITEM NO.	DESCRIPTION AWG	DESCRIPTION COLOR	FROM POINT	FROM CONNECTION	FROM TERM	TO POINT	TO CONNECTION	TO TERM	REMARKS
22	24	—	—	P9-1	SLDR	—	P9-2	SLDR	JUMPER
23	18	BLU	—	S2-3	26	—	LF1-2	26	
24	18	BRN	—	S2-4	26	—	LF1-1	26	
25	18	RED	—	S2-2	26	—	F1-1	SLDR	
29	—	—	—	P1	—	—	P5	—	TRANSFORMER
	—	—	—	P4	—	—	P6	—	FAN
	—	GRN/YEL	1	—	—	—	G1	40,16	
	—	VIO	28	—	—	—	F1-2	—	
	—	RED		—	—				
	—	RED	16	—	—	—	S2-1	—	
29	—	WHT		—	—				
9	—	—	—	P8	—		P7	—	ITEM #30
	—	RED	9	D33-2	—	10	C1-1	—	

WIRE TABLE

ITEM NO.	DESCRIPTION AWG	DESCRIPTION COLOR	FROM POINT	FROM CONNECTION	FROM TERM	TO POINT	TO CONNECTION	TO TERM	REMARKS
9	—	RED	—	—	—	11	C1-1	—	
	—	RED	—						
	—	BLK	—	—	—	12	C1-2	—	
	—	YEL	13	—	—	—	D33-1	—	
	—	BLK						—	
	—	BLK	14	—	—	—	C1-2	—	
	—	YEL	15	—	—	—	D33-2	—	
	—	BLK				—		—	
	—	BLK	16	—	—	—	C1-2	—	
9	—	BLK							
2 OR 3	—	BLU	—	—	—	1	LF1-3	—	
	—	BRN	—	—	—	2	LF1-4	—	
	—	GRN/YEL	—	—	—	3	G2	15,39	
33	—	—	P10	—	—	—	J4	—	ITEM #30

LEGEND

NUMBER	VARIATION
7015569-00	115V
7015569-01	230V

NOTES:

1. VOLTAGE MARKING IN SWITCH WINDOW SHOULD MATCH PLATE(ITEMS #31 OR #38) MARKINGS BEFORE BEING ATTACHED.
2. RUBBER STAMP "N" DESIGNATION AT TIME OF ASSY.

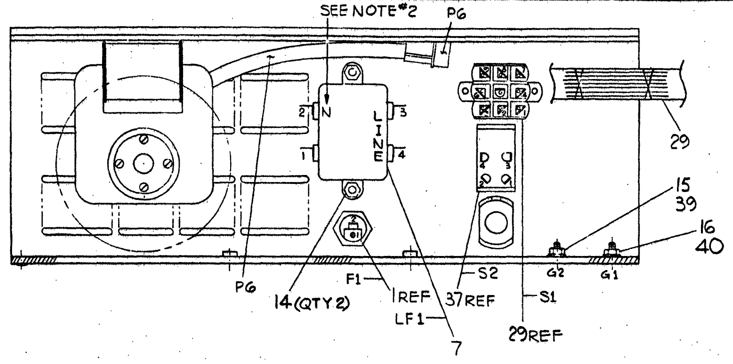

SECTION A-A

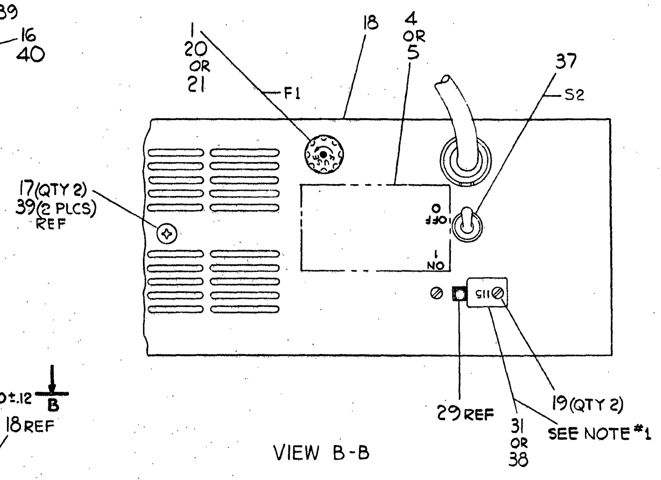

VIEW B-B

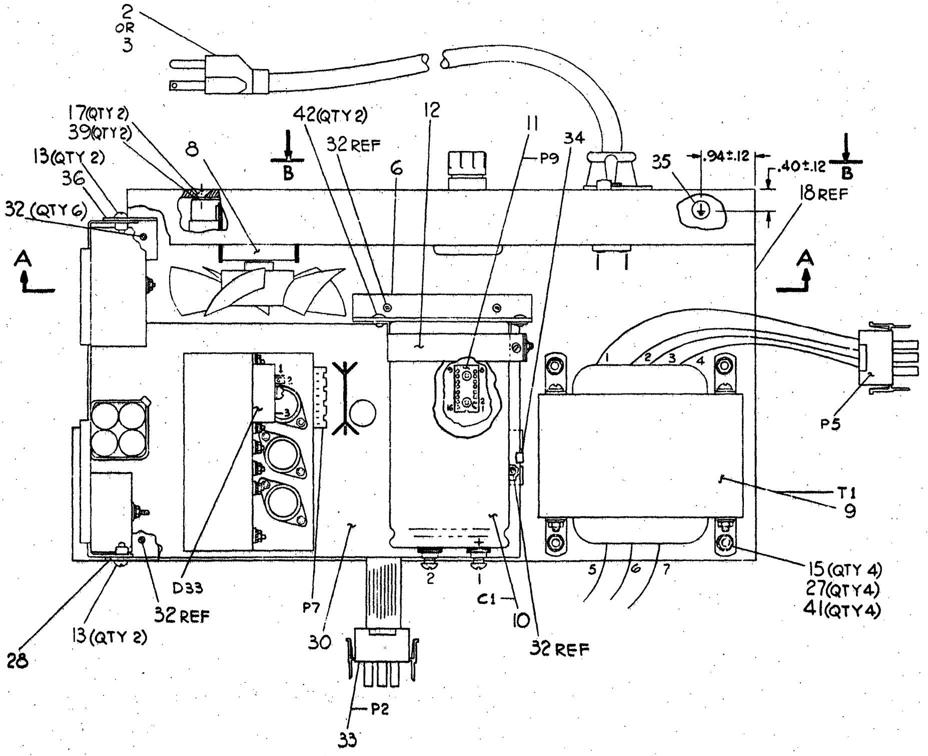

7015569-01	7015569-00	DESCRIPTION	DWG./PART NO.	ITEM NO.
2	2	RIVET, BLIND .156 DIA × .300 LG.	9000030-01	42
4	4	WASHER, FLAT #10	9006666	41
1	1	WASHER, LOCK, EXT. TH. #8	9008072-00	40
3	3	WASHER, LOCK, EXT. TH. #10	9007651-00	39
1	-	PLATE, VT72 SLIDE SWITCH 230V	B-IA-7420776-01	38
1	1	SWITCH, TOGGLE (DPST)	1204722-00	37
1	1	SUPPORT, MODULE FRONT	B-MD-7420588-0-0	36
1	1	DECAL, GROUND SIGN	3612680-01	35
1	1	SUPPORT, MODULE	B-MD-7420616-0-0	34
1	1	HARNESS, D.C. POWER	D-IA-7015543-0-0	33
6	6	RIVET, BLIND .156 DIA × .425 LG	9000030-02	32
-	1	PLATE, VT72 SLIDE SWITCH 115V	B-IA-7420776-00	31
1	1	H780 POWER SUPPLY	D-UA-5411776-0-0	30
1	1	HARNESS, A.C. POWER	E-IA-7015568-0-0	29
1	1	SUPPORT, MODULE REAR	B-MD-7420589-0-0	28
4	4	SCR, FL. HD. 10-32 × .50 LG.	9006073-02	27
5	5	CONN., QUICK, RED	9007970	26
A/R	A/R	WIRE, STRD, 18AWG RED	9107786-22	25
A/R	A/R	WIRE, STRD, 18AWG BRN	9107786-11	24
A/R	A/R	WIRE, STRD, 18AWG BLU	9107786-66	23
A/R	A/R	WIRE, BUSS, 22AWG	9107560-01	22
1	-	FUSE, 2A S.B. (230V)	9007216-00	21
-	1	FUSE, 4A (115V)	9007219-02	20
2	2	SCREW, SEMS 4-40 × .38 LG.	9009702-00	19
1	1	PLATE, POWER SUPPLY	E-IA-7420611-0-0	18
2	2	SCR, FL. HD. 10-32 × .50 LG. BLK FIN.	9000039-08	17
1	1	NUT, KEP 8-32	9006563-00	16
5	5	NUT, KEP 10-32	9006565-00	15
2	2	SPACER, HEX, THD. 6-32 × .375 LG.	9006844	14
4	4	SCREW, PAN HD. 8-32 × .25 LG.	9006035-01	13
1	1	CLAMP, CAP.	1210430	12
1	1	SOCKET, I.C.	1212385-02	11
1	1	CAP, 19,000 MFD	1009966	10
1	1	TRANSFORMER ASSY	D-IA-7015517-0-0	9
1	1	FAN, 35CFM	1212581-00	8
1	1	FILTER, LINE	1212877-00	7
1	1	BRKT, CAP.	B-MD-7420559-0-0	6
1	-	DECAL, POWER PLATE 230V	3615388-01	5
-	1	DECAL, POWER PLATE 115V	3615388-00	4
1	-	POWER CORD ASSY (230V)	C-IA-7015675-0-0	3
-	1	POWER CORD ASSY (115V)	C-IA-7015673-0-0	2
1	1	FUSE HOLDER	1212893-00	1

QUANTITY & VARIATION

UNLESS OTHERWISE SPECIFIED DIMENSIONS ARE IN INCHES

ANGLES ±0° 30'

SURFACE QUALITY IN MICROINCHES

CLASS OF ACCURACY (CHECK ONE)	OVER 0 TO 0.2	OVER 0.2 TO 1.2	OVER 1.2 TO 4.0	OVER 4.0 TO 2.0	OVER 12.0 TO 40.0	OVER 40.0 TO 80.0
MEDIUM ☐	±.004	±.008	±.012	±.016	±.024	±.04
PREFERRED ☐	±.012	±.016	±.025	±.04	±.063	±0.1

THIRD ANGLE PROJECTION

REMOVE BURRS AND BREAK SHARP CORNERS

DO NOT SCALE DWG

MATERIAL SEE PARTS LIST

FINISH

DRN. Pinkard 22FEB78
CHK'D
ENG. M. Logan
PROJ. ENG. M. Logan
PROD.

NEXT HIGHER ASSY. E-UA-VT72-0-0

SCALE

SHEET 1 OF 1

FIRST USED ON VT72

digital

TITLE

POWER SUPPLY
UNIT ASSY.

SIZE E CODE UA NUMBER 7015569-0-0 REV.

DIST.

REVISIONS

CHK	CHANGE NO.	REV.
JA	7015569-00001	A

STEVE 6 APR 78
D. O'CONNELL
L. O'Connell

DEC FORM NO. DRE 100-0

84

COMPONENT SIDE VIEW

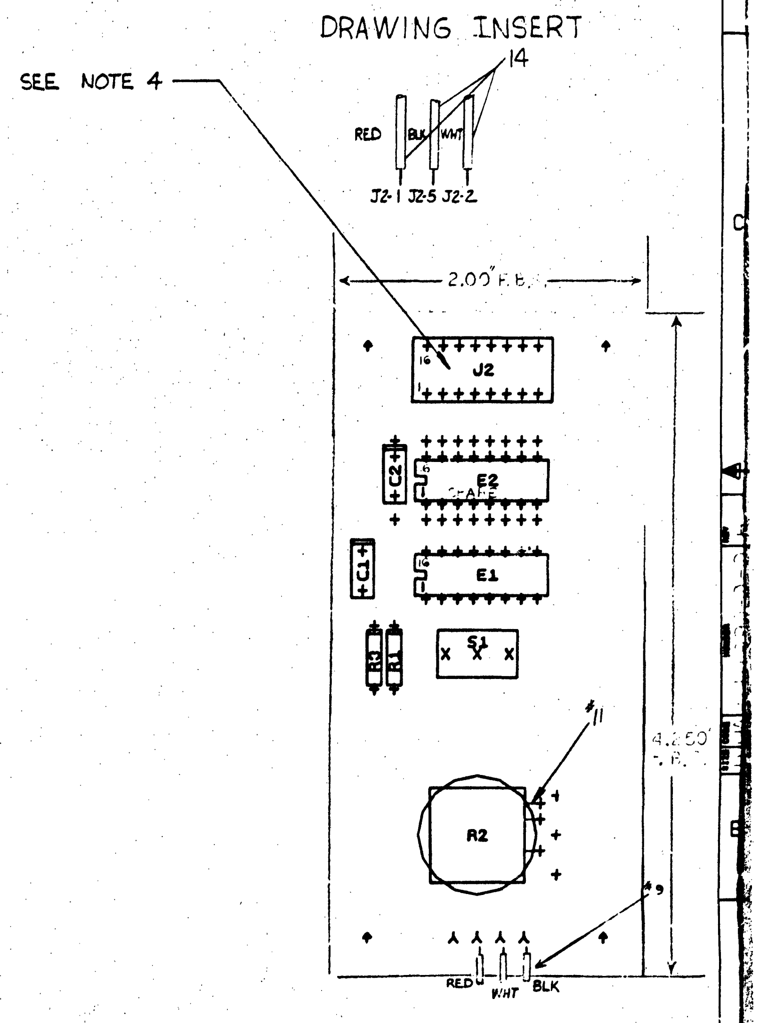
DRAWING INSERT
14
SEE NOTE 4
RED
BLK
WHT
J2-1 J2-5 J2-2
2.00" F.B.
J2
16
1
C2
E2
SPARE
C1
E1
R3
R1
S1
#11
R2
4.250" F.B.
#9
RED
WHT
BLK

NOTES:
1. THIS BOARD REQUIRES U/L APPROVAL
2. E2 IS A SPARE IC LOCATION
3. C2 IS A SPARE CAP. LOCATION
4. FOR -1 VARIATION, A HARNESS IS USED IN PLACE OF J2 I.C. SOCKET. SEE DRAWING INSERT.

REV	CHANGE NO	CHK
A	5411990-00001	T.E.
F	5411990-2	P.G.
	D. Chun 26 Oct 77	D.
	M. ROOSA	
	77	
H	5411990-3	K.J.
	23 78	
	M. ROOSA	

ETCH REV. E
P.C. DESIGN DATA BASE REV. E

SIGNATURES		DATE
DRN.	VINNY PARECHANIAN	
CHK'D	VINNY PARECHANIAN	
ENG.		4/29/76
PROJ. ENG.		
PROD.		4/30/76
SCALE	2/1	
SHT.	1 OF 2	
NEXT HIGHER ASSY.	B-DD-5411990-0-0	

digital

TITLE BOOTSWITCH & BRIGHTNESS CONTROL

SIZE	CODE	NUMBER	REV
D	UA	5411996-0-0	H

MK

MS# 4658

85

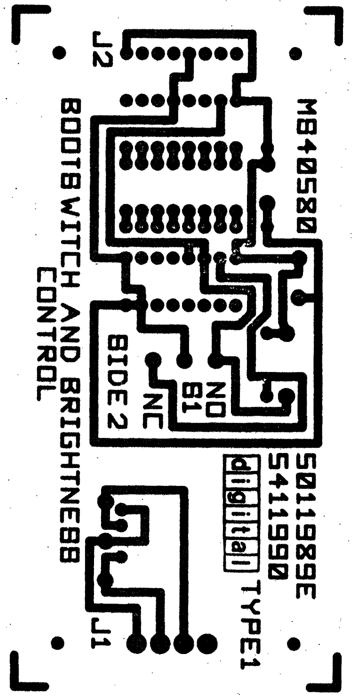
J2
MB40580
BOOTSWITCH AND BRIGHTNESS CONTROL
NO
S1
NC
SIDE 2
5011989E
5411990
digital
TYPE1
J1

THIS BOARD REQUIRES
U/L APPROVAL

REVISIONS		
CHK	CHANGE NO.	REV.

TITLE BOOTSWITCH & BRIGHTNESS CONTROL		SIZE D	CODE UA	NUMBER 5411990-0-0	REV. H
SCALE 2/1	SHEET 2 OF 2	DIST.			

```
AUTOMATED BY  PRTLST 1D(10)                             P A R T S   L I S T                                         SHEET   1 OF   1


LINE ITEM  DOCUMENT NO.              PART NO.        DESCRIPTION                                 QTY  REFERENCE DESIGNATORS


   1    1  D-MD-5011989-0-0          5011989-00      5411990                                       1
   2    2                            1001610-01      .01   MFD  100V OR 50V Z5U DISC/800PF MIN     1  C1
   3    3                            1210786-01      KNOB, PLASTIC FOR 8A                          1
   4    4                            1210841-00      SW,TOG SPECIAL SNAP IN VERSION                1  S1
   5    5                            1211813-00      SOCKET     16PIN LOW PROFILE                  1  J2
   6    6                            1302388-00        2    K 1/4W  5%           CC      (13-00    2  R1,R3
   7    7                            1312956-00      200    K  .5W 10%          POT                1  R2
   8    8                            1911579-00            8641   TRANSCEIVER,BUS,QUAD,UNIBUS      1  E1
   9    9  C-IA-7012359-0-0                          HARNESS,BRIGHTNESS POT                        1
  10   10                            9009507-00      ********  THIS ITEM IS NOT USED  *********    0
  11   11                            9107256-00      TUBING,THIN WALL,.27ID      UL      (91-00 A/R
  12   12                            9009157-00      ********  THIS ITEM IS NOT USED  *********    0
  13   13                            1210786-02      SW,RKR KNOB                                   0
  14   14  D-IA-7015505-0-0                          HARNESS,BOOTSWITCH                            0















-----------------------------------------------------------------------------------------------------------------------------------
!  REVISION HISTORY  !VARIATIONS FOR THIS ASSY.!                                            !                                     !
!____________________!_________________________!FIRST USED ON:                              !    DIGITAL EQUIPMENT CORPORATION    !
! CHK ! ECO NO ! REV !                         !____________________________________________!       MAYNARD, MASSACHUSETTS        !
!_____!________!_____! 00,01                   !                          !                 !_____________________________________!
! KIT ! 00003  ! H   !                         !MADE BY:   V.PARECHANIAN  !DATE: 28-FEB-78  !TITLE                                !
!     !        !     !                         !__________________________!_________________!             PARTS LIST              !
!     !        !     !                         !                          !                 !                                     !
!     !        !     !                         !CHECKED:   R .KOPPENOL    !DATE: 28-FEB-78  !   BOOTSWITCH & BRIGHTNESS CTRL.     !
!     !        !     !                         !__________________________!_________________!                                     !
!     !        !     !                         !                          !                 !   (00 VARIATION)                    !
!     !        !     !                         !DSN.ENG.:  R.CARNELIO     !DATE: 28-FEB-78  !_____________________________________!
!     !        !     !                         !__________________________!_________________!SIZE!CODE!   DOCUMENT NUMBER   ! REV !
!     !        !     !                         !                          !                 !    !    !                     !     !
!     !        !     !                         !PROD.:     J.RISKO        !DATE: 28-FEB-78  ! K  ! PL !   5411990-0-DBP     !H    !
!     !        !     !                         !__________________________!_________________!____!____!_____________________!_____!
!     !        !     !                         !                          !                 !                               !EDIT#!
!     !        !     !                         !RESP.ENG.: R.CARNELIO     !DATE: 28-FEB-78  !ASSY.NO.: D-UA-5411990-0-0     !   8 !
!_____!________!_____!_________________________!__________________________!_________________!_______________________________!_____!
!      "THIS DRAWING AND SPECIFICATIONS HEREIN, ARE THE PROPERTY OF DIGITAL EQUIPMENT CORPORATION AND SHALL NOT BE REPRODUCED     !
!       OR COPIED OR USED IN WHOLE OR IN PART AS THE BASIS FOR THE MANUFACTURE OR SALE OF ITEMS WITHOUT WRITTEN PERMISSION.       !
!                                         COPYRIGHT    1978, DIGITAL EQUIPMENT CORPORATION "                                      !
!---------------------------------------------------------------------------------------------------------------------------------!
```

D CS 5411990-0-1 E

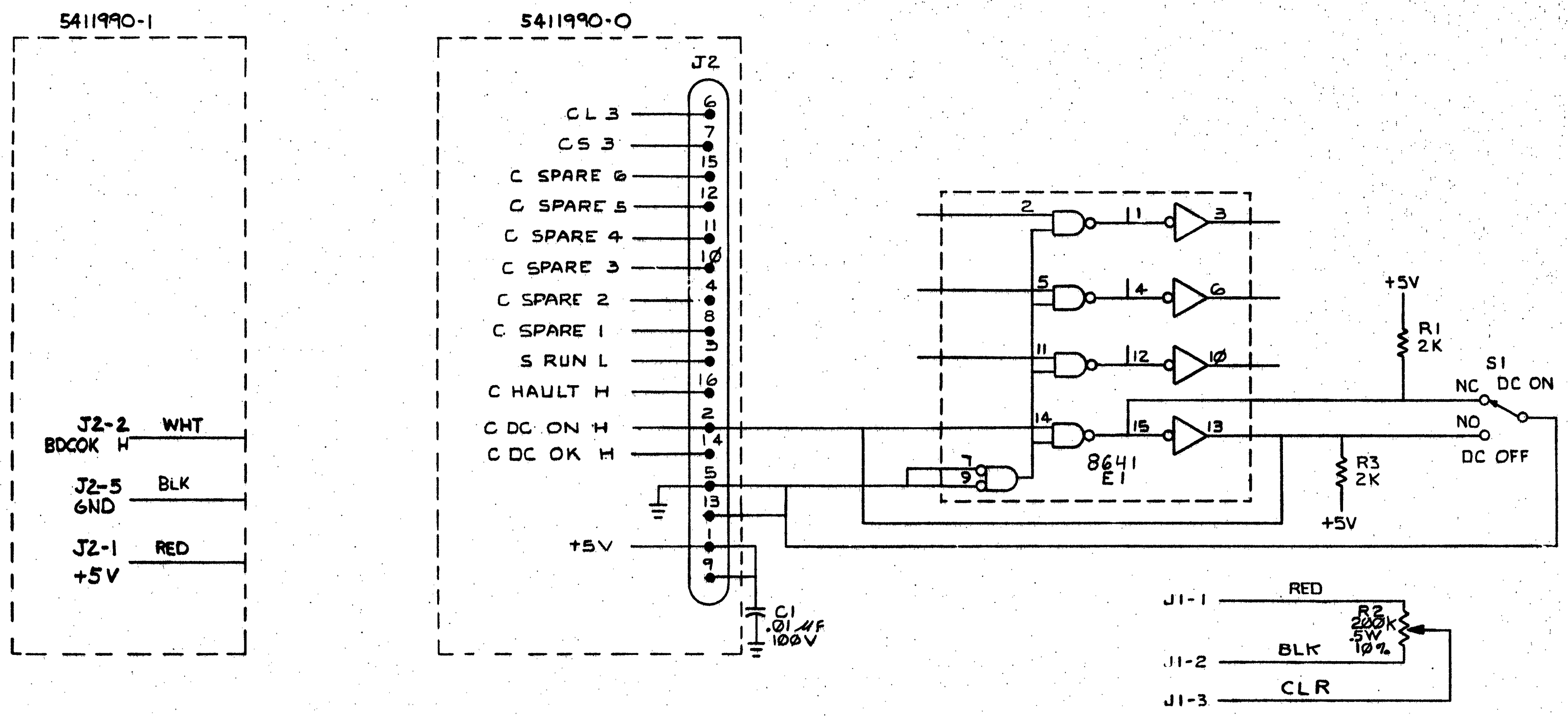
5411990-1
J2-2
BDCOK H
WHT
J2-5
GND
BLK
J2-1
+5V
RED
5411990-0
J2
CL 3
CS 3
C SPARE 6
C SPARE 5
C SPARE 4
C SPARE 3
C SPARE 2
C SPARE 1
S RUN L
C HAULT H
C DC ON H
C DC OK H
+5V
6
7
15
12
11
10
4
8
3
16
2
14
5
13
1
9
C1
.01 µF
100V
2
11
3
5
4
6
11
12
10
14
15
13
7
9
8641
E1
+5V
R1
2K
S1
NC
DC ON
NO
DC OFF
R3
2K
+5V
J1-1
RED
R2
200K
.5W
10%
J1-2
BLK
J1-3
CLR

REVISIONS

REV.	CHANGE NO.
E	5411990-00003

27 Feb 78
M. ROOSA
M. Roosa 4/17/78

DRN.		1/9/76	FIRST USED ON VT 71
CHK'D. R. Koppenal		2-5-76	digital
ENG.			TITLE BOOTSWITCH & BRIGHTNESS CONTROL
PROJ. ENG.			
PROD.			
NEXT HIGHER ASSY.			
D-UA-5411990-0-0			SIZE D · CODE CS · NUMBER 5411990-0-1 · REV. E
SCALE			DIST.
SHEET 1 OF 1			

MK

NOTES:

1. UNLESS OTHERWISE SPECIFIED, ALL RESISTORS ARE 1/4 W, 5% ; ALL CAPACITORS ARE IN µf.
2. COMPONENTS SHOWN IN DASHED LINES ARE EXTERNAL TO THE P.C. BOARD.

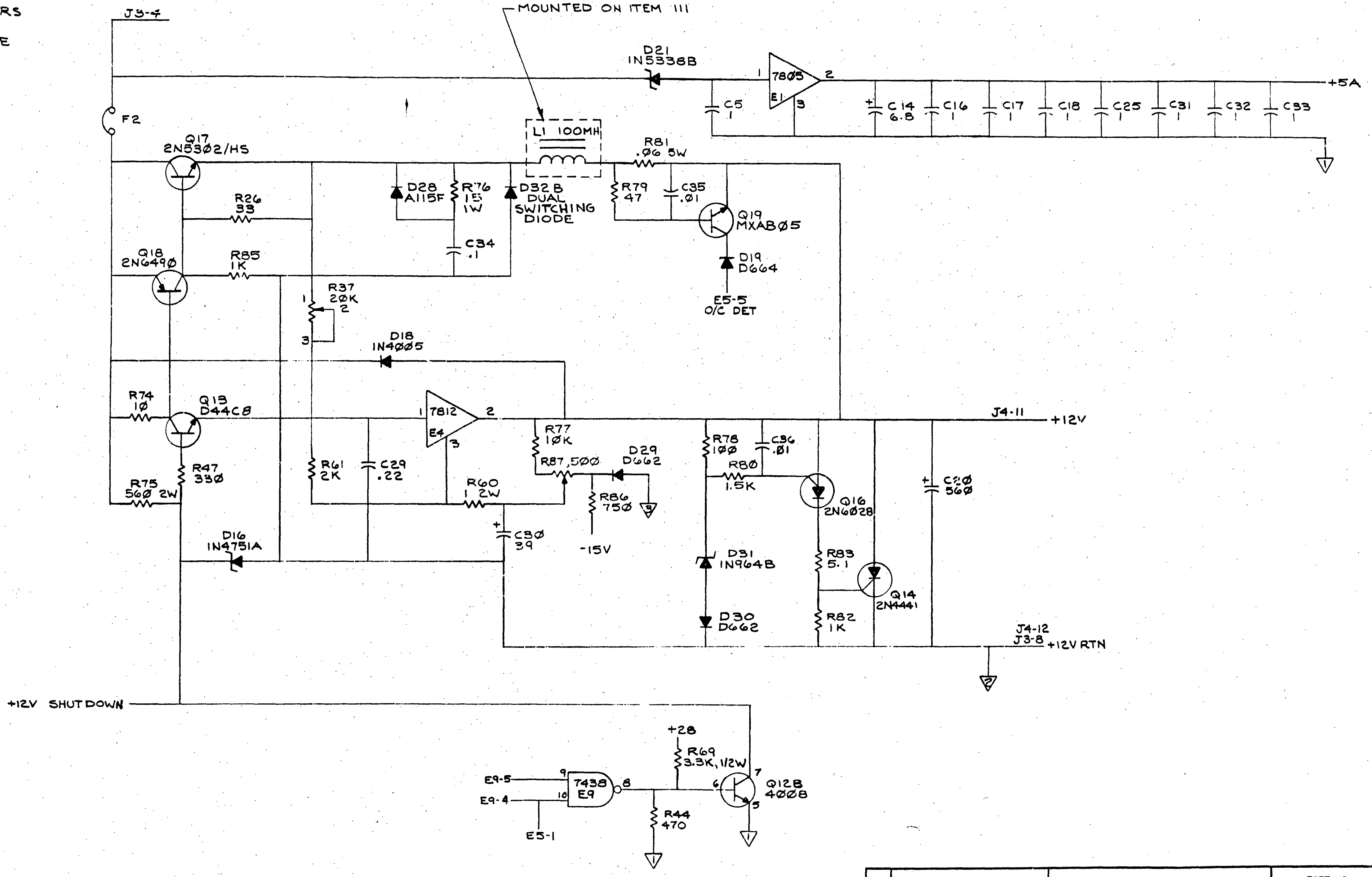
J3-4
F2
MOUNTED ON ITEM 111
D21
1N5338B
1
7805
E1
2
3
+5A
C5
1
C14
6.8
C16
1
C17
1
C18
1
C25
1
C31
1
C32
1
C33
1
L1 100MH
R81
.06 5W
Q17
2N5302/HS
D28
A115F
R76
15
1W
D32 B
DUAL
SWITCHING
DIODE
R79
47
C35
.01
Q19
MXAB05
D19
D664
E5-5
O/C DET
R26
33
C34
.1
Q18
2N6490
R85
1K
R37
20K
1
2
3
D18
1N4005
R74
10
Q13
D44C8
1
7812
E4
2
3
R77
10K
R87,500
D29
D662
R78
100
C36
.01
R80
1.5K
J4-11
+12V
R75
560 2W
R47
330
R61
2K
C29
.22
R60
1 2W
R86
750
-15V
C30
39
Q16
2N6028
C20
560
D16
1N4751A
D31
1N964B
R83
5.1
Q14
2N4441
D30
D662
R82
1K
J4-12
J3-8
+12V RTN
+12V SHUTDOWN
+28
R69
3.3K, 1/2W
E9-5
E9-4
9
10
7438
E9
8
6
7
5
Q128
4008
R44
470
E5-1

LM 339	E5	12			3
LM 393	E2		8	4	
IC TYPE		GND	+5V	-15V	+28V

GND AND 5V ARE USUALLY PIN 7 AND 14 RESPECTIVELY EXCEPTIONS ARE STATED ABOVE

IC PIN LOCATIONS

HIGHEST REF. DES.						
C39	D36	E10	Q19	R96	T1	L2

REF. DES. DELETED
C3, C19, C28, C38
R42, R47, R49, R56, R5

REVISIONS	CHANGE NO.	REV.	CHK
REVISED & REDRAWN	5411776-00011	M	F. Kearns 17 Aug 77
F. KEARNS			
Burt G. Hunt 7-22-77	5411776-00013	N	
M.QUADRI			M. Quadri 24 Feb 78

FIRST USED ON OPTION MODEL

DEC NO.	EIA NO.	DEC NO.	EIA NO.

SEMICONDUCTOR CONVERSION CHART

QTY	REF. DESIGNATION	DESCRIPTION	PART NO.	ITEM NO.

PARTS LIST

ETCH BOARD REV. D

DRN. Burt G. Hunt DATE 7-22-77
CHK'D. DATE 7-22-77
ENG. FRED KEARNS DATE 7-27-77
PROJ. ENG. M. QUADRI DATE 7-27-77
PROD. R. Powers DATE 8-24-77
NEXT HIGHER ASSY D-AD-7011569-0-0
SCALE —
SHEET 1 OF 3

digital

TITLE H780
POWER SUPPLY

SIZE D CODE CS NUMBER 5411776-0-1 REV. N
DIST.

DEC FORM NO. DRD 135-B

89

* CAPACITOR C1 LOCATED IN WIREFORM ASSY. (SEE NOTE 2 SHEET 1 OF 3)

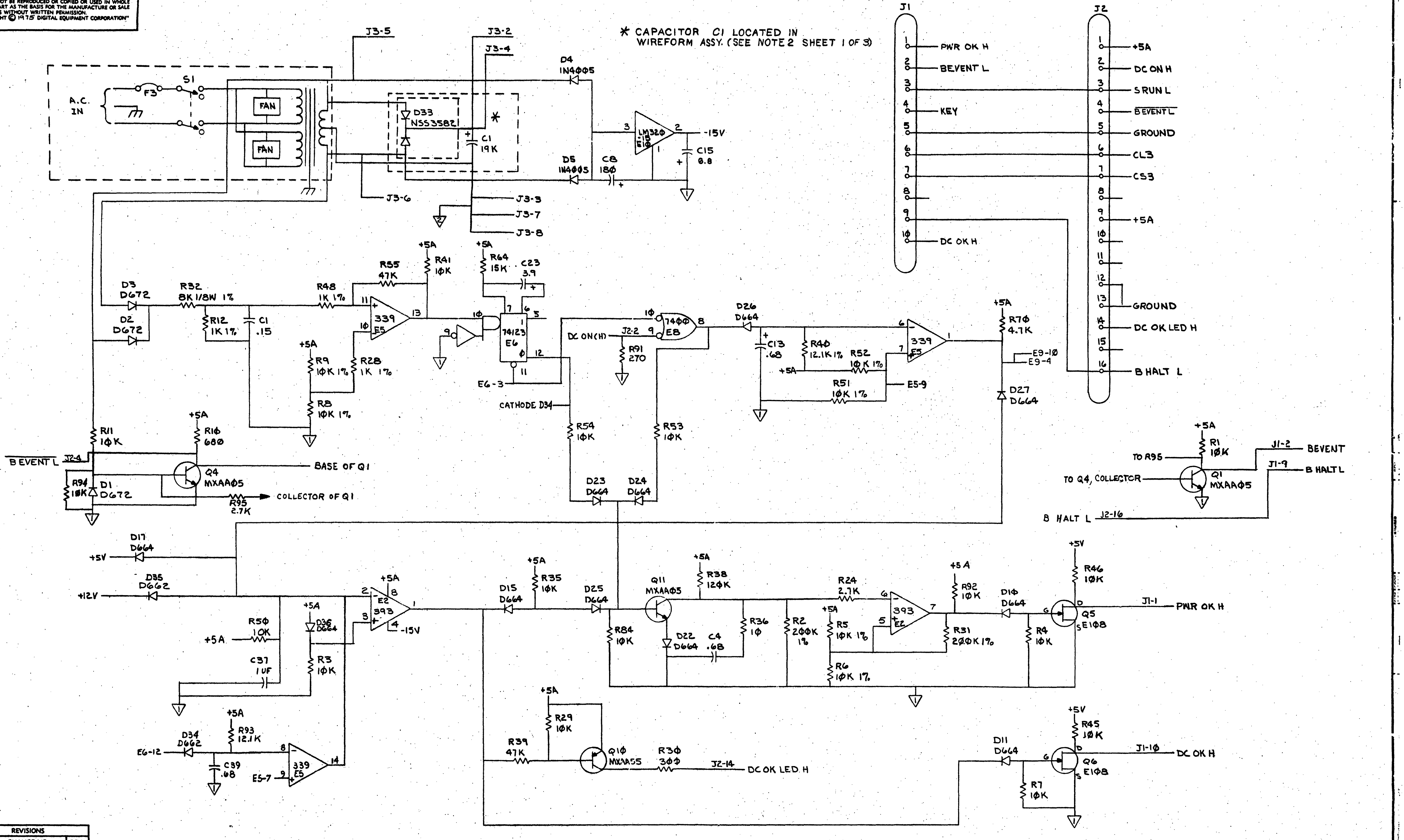
J3-5
J3-2
J3-4
A.C. IN
F3
S1
FAN
FAN
D33 NS53582
C1 19K
D4 1N4005
D5 1N4005
LM320 E10 -15
-15V
C15 6.8
C8 180
J3-6
J3-3
J3-7
J3-8
J1
PWR OK H
BEVENT L
KEY
DC OK H
J2
+5A
DC ON H
SRUN L
BEVENT L
GROUND
CL3
CS3
+5A
GROUND
DC OK LED H
B HALT L
D3 D672
D2 D672
R32 8K 1/8W 1%
R12 1K 1%
C1 .15
R48 1K 1%
R55 47K
R41 10K
339 E5
R9 10K 1%
R28 1K 1%
R8 10K 1%
R64 15K
C23 3.9
74123 E6
E6-3
DC ON(H)
J2-2
R91 270
7400 E8
CATHODE D34
D26 D664
C13 .68
R40 12.1K 1%
R52 10K 1%
R51 10K 1%
339 E5
E5-9
R70 4.7K
E9-10
E9-4
D27 D664
R54 10K
R53 10K
D23 D664
D24 D664
R11 10K
R10 680
BEVENT L J2-4
R94 10K
D1 D672
Q4 MXAA05
BASE OF Q1
R95 2.7K
COLLECTOR OF Q1
+5A
R1 10K
TO R95
TO Q4, COLLECTOR
Q1 MXAA05
J1-2 BEVENT
J1-9 B HALT L
B HALT L J2-16
D17 D664
+5V
D35 D662
+12V
R50 10K
+5A
C37 1UF
D36 D664
R3 10K
393 E2
-15V
D15 D664
R35 10K
D25 D664
Q11 MXAA05
R38 120K
R84 10K
D22 D664
C4 .68
R36 10
R2 200K 1%
R24 2.7K
R5 10K 1%
R6 10K 1%
393 E2
R92 10K
R31 200K 1%
D10 D664
R46 10K
R4 10K
Q5 E108
J1-1
PWR OK H
D34 D662
E6-12
R93 12.1K
C39 .68
E5-7
339 E5
R29 10K
R39 47K
Q10 MXAA55
R30 300
J2-14
DC OK LED H
D11 D664
R45 10K
Q6 E108
J1-10
DC OK H
R7 10K

REVISIONS		
CHK	CHANGE NO.	REV.

TITLE H780 POWER SUPPLY
SIZE D CODE CS NUMBER 5411776-0-1 REV. NA
SCALE SHEET 2 OF 3 DIST.

DEC FORM NO. DPD 138

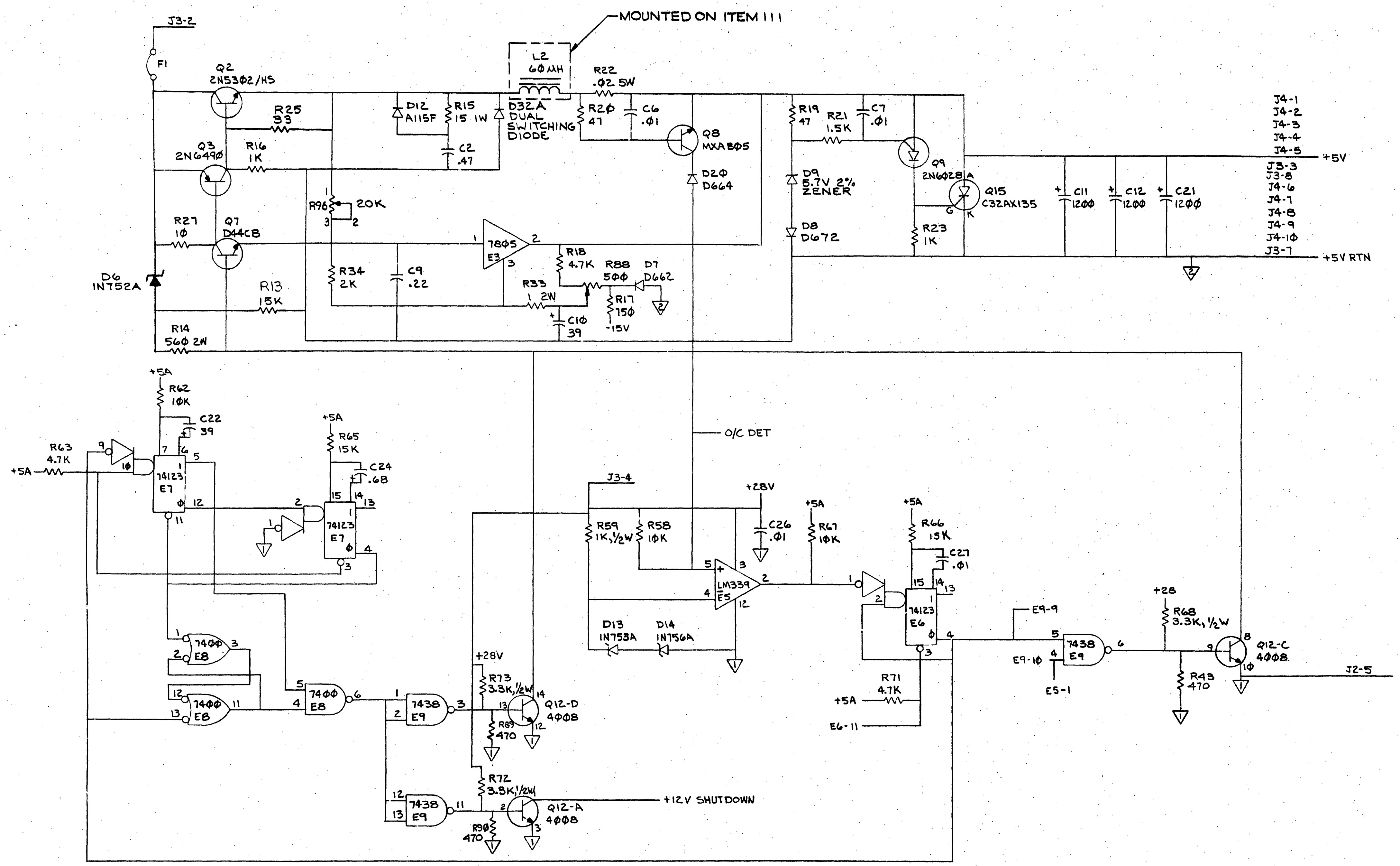
MOUNTED ON ITEM 111
J3-2
F1
Q2
2N5302/HS
R25
33
Q3
2N6490
R16
1K
R27
10
Q7
D44C8
D6
1N752A
R13
15K
R14
560 2W
L2
60 µH
D12
A115F
R15
15 1W
D32A
DUAL
SWITCHING
DIODE
C2
.47
R96
20K
R34
2K
C9
.22
7805
E3
R22
.02 5W
R20
47
C6
.01
Q8
MXA805
D20
D664
R18
4.7K
R88
500
D7
D662
R33
1 2W
C10
39
R17
750
-15V
R19
47
R21
1.5K
C7
.01
Q9
2N6028
D9
5.7V 2%
ZENER
D8
D672
R23
1K
Q15
C32AX135
A
G
K
C11
1200
C12
1200
C21
1200
J4-1
J4-2
J4-3
J4-4
J4-5
+5V
J3-3
J3-8
J4-6
J4-7
J4-8
J4-9
J4-10
J3-7
+5V RTN
+5A
R62
10K
C22
39
R63
4.7K
+5A
74123
E7
R65
15K
C24
.68
74123
E7
O/C DET
J3-4
+28V
R59
1K, 1/2W
R58
10K
C26
.01
LM339
E5
D13
1N753A
D14
1N756A
+5A
R67
10K
+5A
R66
15K
C27
.01
74123
E6
R71
4.7K
+5A
E6-11
E9-9
7438
E9
E9-10
E5-1
+28
R68
3.3K, 1/2W
R43
470
Q12-C
4008
J2-5
7400
E8
7400
E8
7400
E8
7438
E9
+28V
R73
3.3K, 1/2W
Q12-D
4008
R89
470
7438
E9
R72
3.3K 1/2W
Q12-A
4008
R90
470
+12V SHUTDOWN

REVISIONS		
CHK	CHANGE NO.	REV.

DEC FORM NO. A-DD 138

TITLE
H780 POWER SUPPLY

SIZE	CODE	NUMBER	REV.
D	CS	5411776-0-1	N1

SCALE
SHEET 3 OF 3
DIST.

91

THIS DRAWING AND SPECIFICATIONS, HEREIN, ARE THE PROPERTY OF DIGITAL EQUIPMENT CORPORATION AND SHALL NOT BE REPRODUCED OR COPIED OR USED IN WHOLE OR IN PART AS THE BASIS FOR THE MANUFACTURE OR SALE OF ITEMS WITHOUT WRITTEN PERMISSION.
COPYRIGHT © DIGITAL EQUIPMENT CORPORATION

REWORK INSTRUCTIONS

ECO #6
COMPONENT DELETE SIDE 1:
6-1. R25
COMPONENT ADD SIDE 1:
6-2. REPLACE R25 WITH D36
CATHODE STRIPE SHOULD BE
ON RIGHT HAND SIDE OF DIODE

ECO #7
COMPONENT DELETES SIDE 1:
7-1. F2
7-2. C6
7-3. C7
7-4. C26
7-5. C27
7-6. C35
7-7. C36

COMPONENT ADDS SIDE 1:
7-8. F2
7-9. C6
7-10. C7
7-11. C26
7-12. C27
7-13. C35
7-14. C36

COMPONENT SIDE VIEW

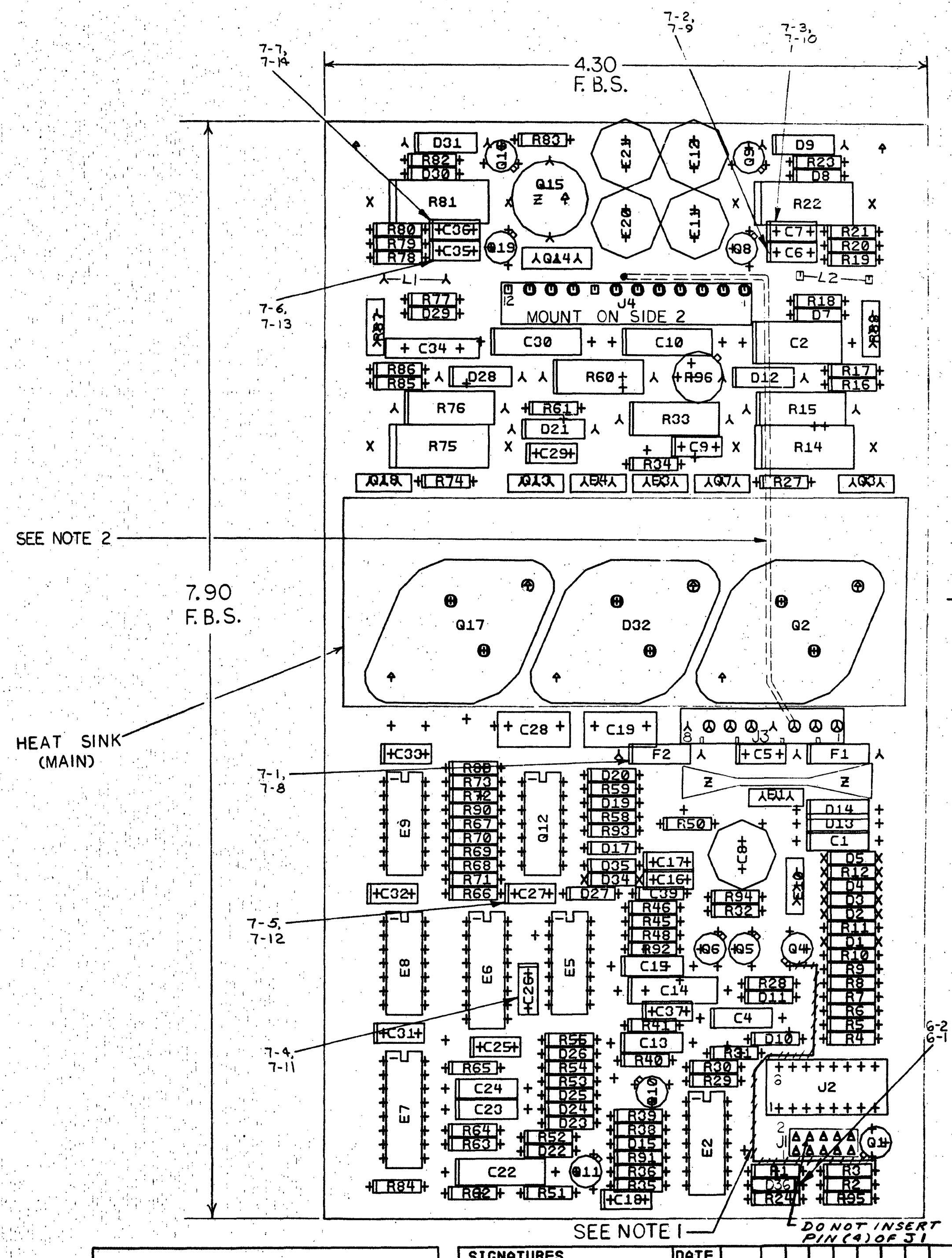
7-7, 7-14
7-2, 7-9
7-3, 7-10
4.30 F.B.S.
7.90 F.B.S.
7-6, 7-13
7-1, 7-8
7-5, 7-12
7-4, 7-11
6-2
6-1
SEE NOTE 2
HEAT SINK (MAIN)
MOUNT ON SIDE 2
J4
J3
J2
J1
Q17
D32
Q2
Q15
R81
R22
C30
C10
C2
C34
R60
R96
D12
R76
R15
R75
R14
R33
C28
C19
C33
F2
C5
F1
E9
Q12
E8
E6
E5
E7
E2
C22
C8
C14
C4
C13
C24
C23
D36
R1
R24
R3
R2
R95
SEE NOTE 1
DO NOT INSERT PIN (4) OF J1

NOTES:
~~1. ADD WIRE #30AWG ON SIDE 1 FROM R3 TO THE EMITTER OF Q4~~
2. ADD WIRE #14 AWG ON SIDE 2 FROM GROUND CLAD AT J4 PINS 6-10 TO J3 PIN 3.

REV	CHANGE NO	CHK
E	00C09	
F	00005	
H	00006	
J	0C007	
K	00008	
L	00009	K.T

ETCH REV. C
P.C. DESIGN DATA BASE REV. C-P3

SIGNATURES		DATE
DRN.	JOHN LEPKOWSKI	3-1-76
CHK'D.		3-29-76
ENG.	Dan Sheehan	5-7-76
PROJ. ENG	Mike Kouloupoulos	5-7-76
PROD.	M. Walter	5-7-76
SCALE	2 TO 1	
SHT.	1 OF 4	
NEXT HIGHER ASSY.		

digital

TITLE H780
POWER SUPPLY

SIZE	CODE	NUMBER	REV
D	AH	5411776-0-5	L

MS# NA

COMPONENT SIDE VIEW

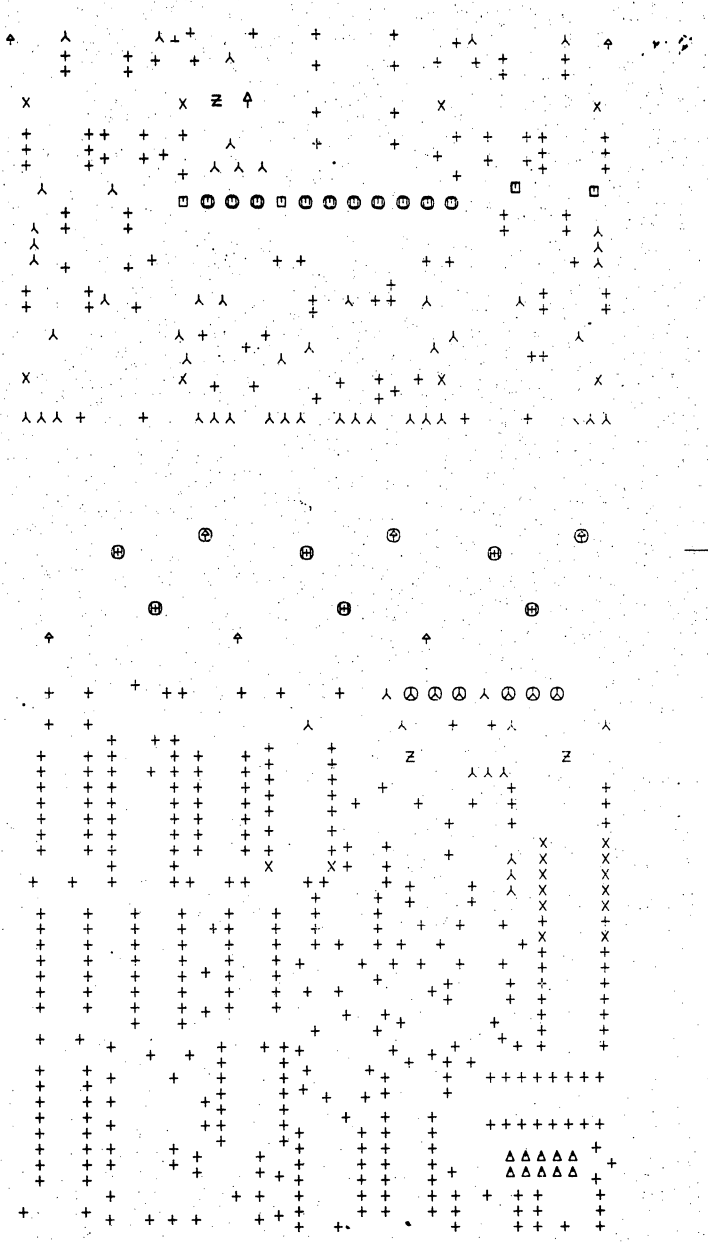

NOTES:

HOLE DATA										
SYMBOL	+	⅄	X	⍏	Ƶ	⌶	Δ	⎕		
FIN HOLE SIZE	.042	.055	.051	.156	.128	.066	.032	.082		
PLATED	X	X	X	X	X	X	X	X		
NON PLATED										
QTY.	450	67	22	9	3	6	10	14		
○-OFF GRD HLE		6		3		6		10		
DRILL SIZE										

BOARD FABRICATION INFORMATION	
PANEL SIZE	8.540 X 11.750
PANEL DATA DWG.#	D-MD-7605819
PANEL MAT'L	.055 THICKNESS
QTY. OF LAYERS	2 LAYERS
COPPER THICKNESS	2 OUNCE
PTH. YES PRINT AND ETCH	
MODULE INSERTED 100 TIMES OR MORE?	

SIGNATURES	DATE
DRN. JOHN LEPKOWSKI	3-1-76
CHK'D.	3-4-76
ENG.	3-4-76
PROJ.ENG.	3-4-76
PROD.	
SCALE 2 TO 1	
SHT. 2 OF 4	
NEXT HIGHER ASSY.	

digital

TITLE
H780
POWER SUPPLY

SIZE	CODE	NUMBER	REV
D	AH	5411776 - 0 - 5	L

1 MS# NA

THIS DRAWING AND SPECIFICATIONS, HEREIN, ARE THE PROPERTY OF DIGITAL EQUIPMENT CORPORATION AND SHALL NOT BE REPRODUCED OR COPIED OR USED IN WHOLE OR IN PART AS THE BASIS FOR THE MANUFACTURE OR SALE OF ITEMS WITHOUT WRITTEN PERMISSION.
COPYRIGHT © DIGITAL EQUIPMENT CORPORATION

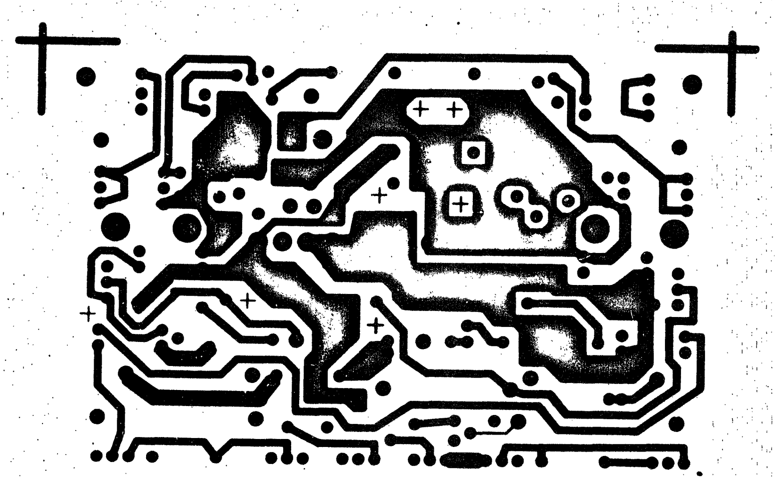

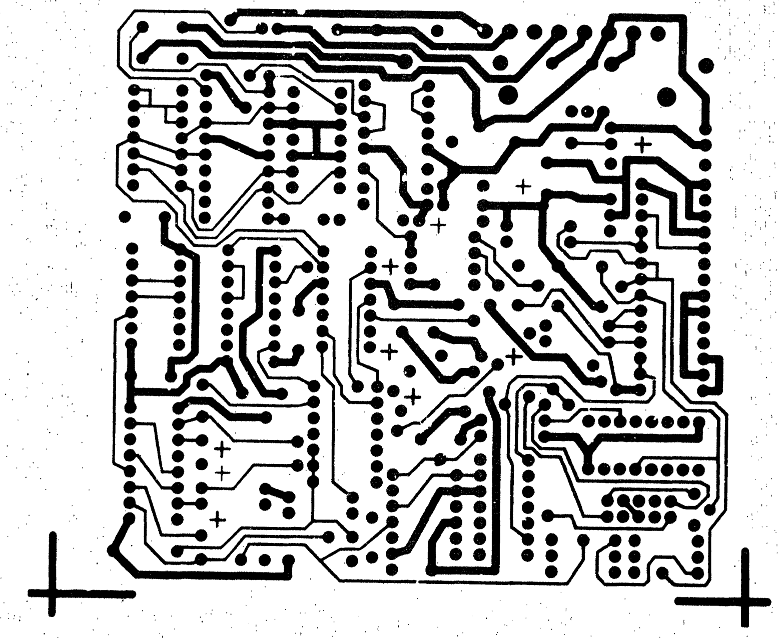

NOTES:

REV	CHANGE NO	CHK

SIGNATURES	DATE	
DRN. J. LEPKOWSKI	3-4-76	digital
CHK'D	3-23-76	
ENG.	5-7-76	TITLE H780 POWER SUPPLY
PROJ. ENG	5-7-76	
PROD.		
SCALE 2 TO 1		SIZE D · CODE AH · NUMBER 5411776-0-5 · REV L
SHT. 3 OF 4		
ETCH REV C	FIRST USED ON	

MS# NA

THIS DRAWING AND SPECIFICATIONS, HEREIN, ARE THE PROPERTY OF DIGITAL EQUIPMENT CORPORATION AND SHALL NOT BE REPRODUCED OR COPIED OR USED IN WHOLE OR IN PART AS THE BASIS FOR THE MANUFACTURE OR SALE OF ITEMS WITHOUT WRITTEN PERMISSION.
COPYRIGHT © DIGITAL EQUIPMENT CORPORATION

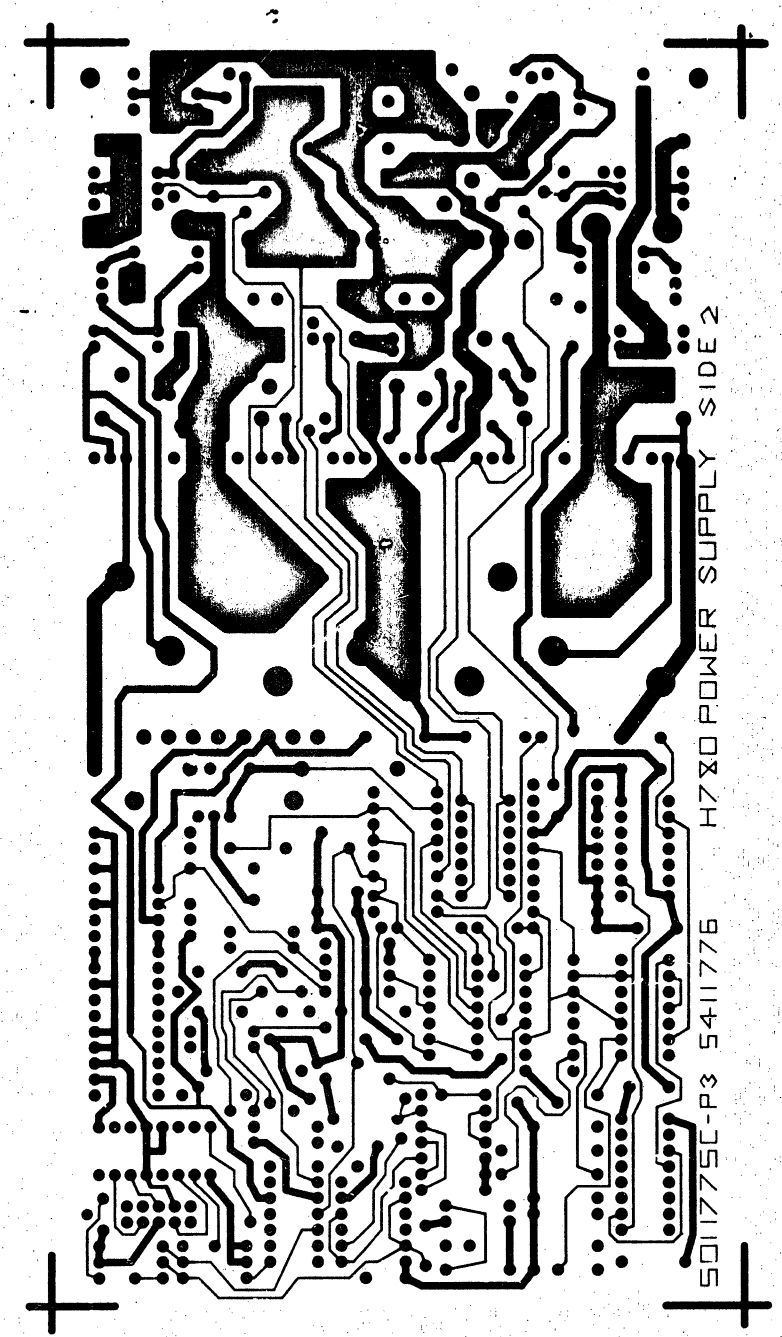

NOTES

CHK	CHANGE NO	REV

SIGNATURES | DATE
DRN. J. LEPKOWSKI 3-4-76
CHK'D. 3-29-76
ENG. M. K. Kodaporian 5-7-76
PROJ. ENG. M. Kodapod 5-7-76
PROD.
SCALE 2 TO 1
SHT. 4 OF 4
ETCH REV C | FIRST USED ON

digital

TITLE H780 POWER SUPPLY

SIZE D | CODE AH | NUMBER 5411776-0-5 | REV L

95

DIGITAL EQUIPMENT CORPORATION
MAYNARD, MASSACHUSETTS
PARTS LIST

MADE BY E. Wilson
DATE 22 SEPT 77
CHECKED RW Counter
DATE 23 Sept 77
SECTION 1
ENG Robert Fitch
DATE 1 Dec 77
PROD
DATE 12-2-77
ISSUED SECT. 1

ITEM NO.	DWG NO./PART NO.	DESCRIPTION	QUANTITY VARIATION
1	M7270	LSI 11 CPU	1
2	9905622-0	BOX, FOLDING, REVERSE TUCK	1

TITLE LSI 11 CPU WITH NO MEMORY
ASSY NO. B-DD-KD11-HA
SHEET 1 OF 1
SIZE A
CODE PL
NUMBER KD11-HA-0
REV
ECO NO.
DIST

DEC FORM
DRA 110

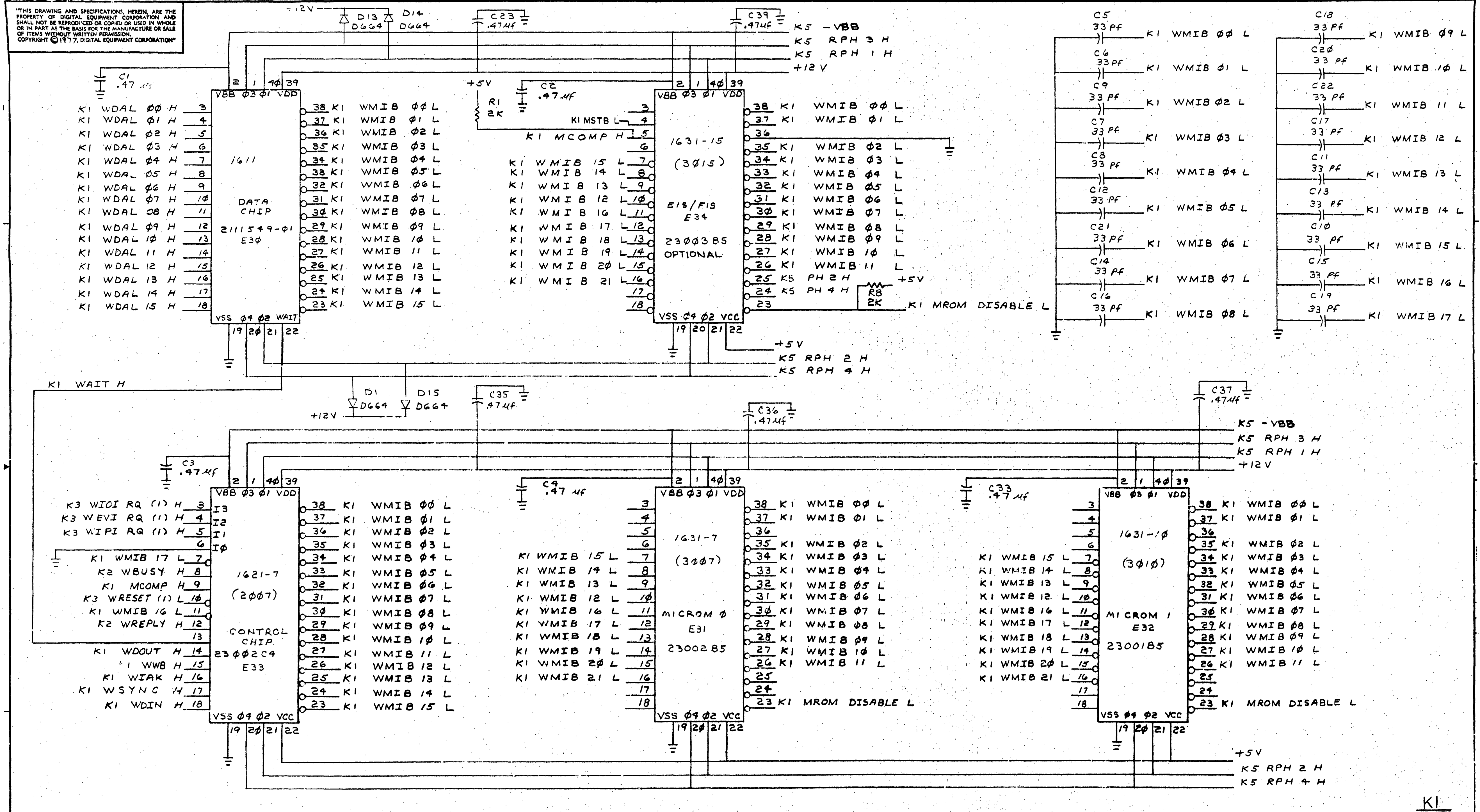
+12V
D13 D664
D14 D664
C23 .47uf
C39 .47uf
K5 -VBB
K5 RPH 3 H
K5 RPH 1 H
+12 V
C1 .47 uf
VBB Φ3 Φ1 VDD
K1 WDAL 00 H
K1 WDAL 01 H
K1 WDAL 02 H
K1 WDAL 03 H
K1 WDAL 04 H
K1 WDAL 05 H
K1 WDAL 06 H
K1 WDAL 07 H
K1 WDAL 08 H
K1 WDAL 09 H
K1 WDAL 10 H
K1 WDAL 11 H
K1 WDAL 12 H
K1 WDAL 13 H
K1 WDAL 14 H
K1 WDAL 15 H
1611
DATA CHIP
2111549-01
E30
VSS Φ4 Φ2 WAIT
K1 WMIB 00 L
K1 WMIB 01 L
K1 WMIB 02 L
K1 WMIB 03 L
K1 WMIB 04 L
K1 WMIB 05 L
K1 WMIB 06 L
K1 WMIB 07 L
K1 WMIB 08 L
K1 WMIB 09 L
K1 WMIB 10 L
K1 WMIB 11 L
K1 WMIB 12 L
K1 WMIB 13 L
K1 WMIB 14 L
K1 WMIB 15 L
+5V
R1 2K
C2 .47uf
K1 MSTB L
K1 MCOMP H
K1 WMIB 15 L
K1 WMIB 14 L
K1 WMIB 13 L
K1 WMIB 12 L
K1 WMIB 16 L
K1 WMIB 17 L
K1 WMIB 18 L
K1 WMIB 19 L
K1 WMIB 20 L
K1 WMIB 21 L
1631-15
(3015)
E15/F15
E34
2300385
OPTIONAL
K5 PH 2 H
K5 PH 4 H
R8 2K
+5V
K1 MROM DISABLE L
+5V
K5 RPH 2 H
K5 RPH 4 H
C5 33 PF
C6 33 PF
C9 33 PF
C7 33 PF
C8 33 PF
C12 33 PF
C21 33 PF
C14 33 PF
C16 33 PF
C18 33 PF
C20 33 PF
C22 33 PF
C17 33 PF
C11 33 PF
C13 33 PF
C10 33 PF
C15 33 PF
C19 33 PF
K1 WMIB 16 L
K1 WMIB 17 L
K1 WAIT H
D1 D664
D15 D664
+12V
C35 .47uf
C36 .47uf
C37 .47uf
C3 .47uf
C4 .47 uf
C33 .47 uf
K3 WIC1 RQ (1) H
K3 WEVI RQ (1) H
K3 WIPI RQ (1) H
I3 I2 I1 I0
K1 WMIB 17 L
K2 WBUSY H
K1 MCOMP H
K3 WRESET (1) L
K1 WMIB 16 L
K2 WREPLY H
K1 WDOUT H
K1 WWB H
K1 WIAK H
K1 WSYNC H
K1 WDIN H
1621-7
(2007)
CONTROL CHIP
23002C4
E33
1631-7
(3007)
MICROM 0
E31
2300285
1631-10
(3010)
MICROM 1
E32
2300185
K1 MROM DISABLE L
K5 -VBB
K5 RPH 3 H
K5 RPH 1 H
+12V
+5V
K5 RPH 2 H
K5 RPH 4 H

K1

REV.	CHANGE NO.	CHK			
D	M7270-00001		H. Densmore 11/30/77	R. FITCH	Robert Fitch 1 Dec 77
E	M7270-MR002	TH	7 MARCH	R FITCH	Robert Fitch 22 MAR 78
F	M7270-MR0003		7A	R. FITCH	Robert N. Fitch 25 MAY 78
H	M7270-MR004		J. Clark 27 Sept 78	R. SALETT	Ronald M. Salett 11/6/78

DRN. L. Wilson	4/19/77	FIRST USED ON LSI-11	digital
CHK'D RW Counter	19 Sept 77	TITLE	
ENG. Robert Fitch	20 SEP 77	LSI-11 CPU	
PROJ. ENG.	20 SEP 77		
PROD.	9/23/77		
NEXT HIGHER ASSY.			
B-DD-M7270-0		SIZE D	CODE CS	NUMBER M7270-0-1	REV. H
SCALE NONE			
SHEET 1 OF 6		DIST.	

97

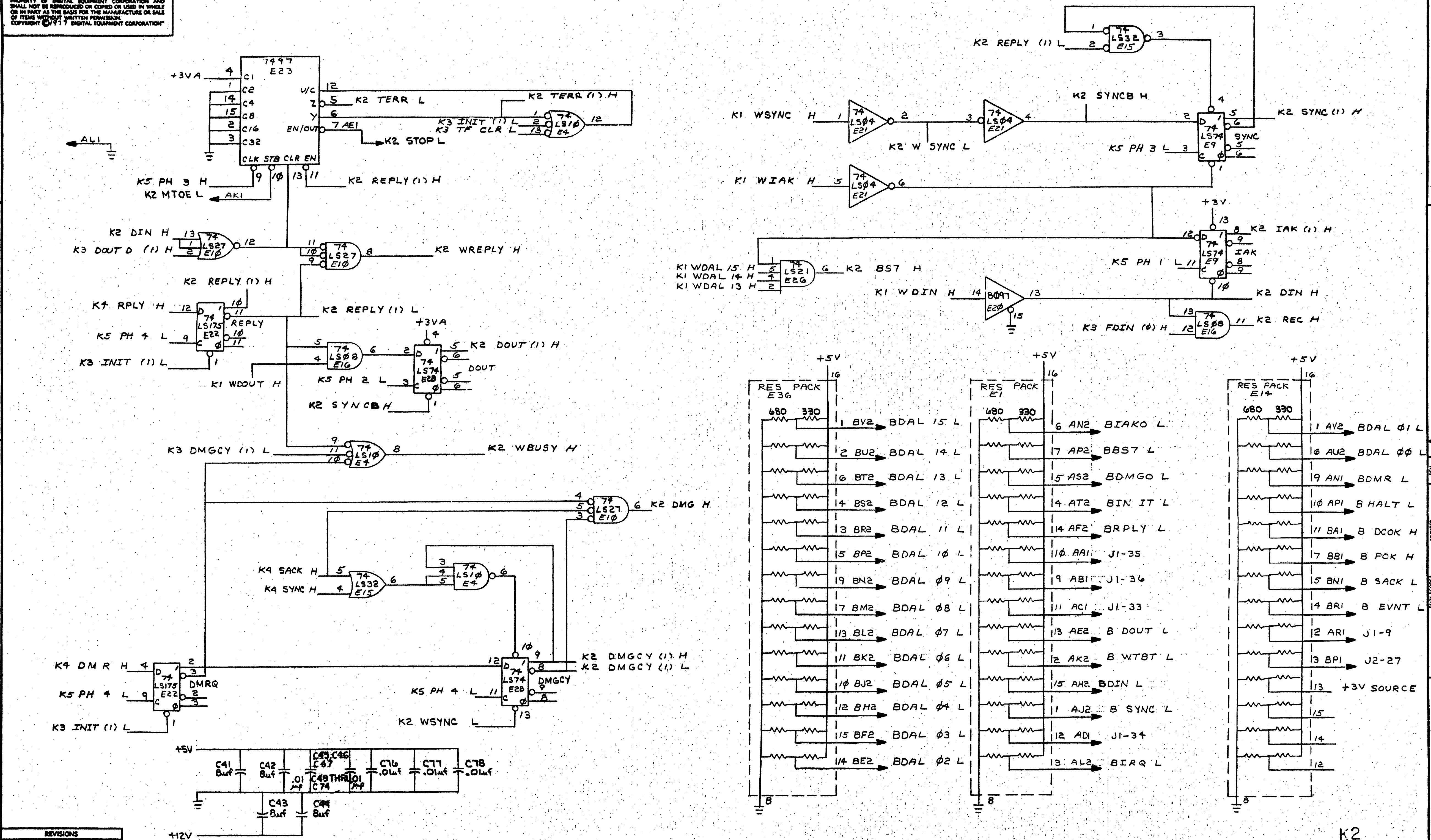
1497 E23
+3VA
C1 C2 C4 C8 C16 C32
CLK STB CLR EN
U/C Z Y EN/OUT
K2 TERR L
K2 TERR (1) H
K3 INIT (1) L
K3 TF CLR L
74 LS10 E4
7 AEI
K2 STOP L
ALI
K5 PH 3 H
K2 MTOE L
AKI
K2 REPLY (1) H
K2 DIN H
K3 DOUT D (1) H
74 LS27 E10
K2 WREPLY H
K2 REPLY (1) H
K4 RPLY H
K5 PH 4 L
K3 INIT (1) L
74 LS175 E22
REPLY
K2 REPLY (1) L
+3VA
74 LS08 E16
74 LS74 E28
K2 DOUT (1) H
DOUT
K5 PH 2 L
K1 WDOUT H
K2 SYNCB H
K3 DMGCY (1) L
K2 WBUSY H
74 LS27 E10
K2 DMG H
K4 SACK H
K4 SYNC H
74 LS32 E15
74 LS10 E4
K4 DMR H
K5 PH 4 L
K3 INIT (1) L
DMRQ
K5 PH 4 L
K2 WSYNC L
DMGCY
K2 DMGCY (1) H
K2 DMGCY (1) L
+5V
C41 8uf
C42 8uf
.01 μf
C45,C46 C47 C49 THRU 101 C74
C76 .01uf
C77 .01uf
C78 .01uf
C43 8uf
C44 8uf
+12V
K2 REPLY (1) L
74 LS32 E15
K1 WSYNC H
74 LS04 E21
K2 W SYNC L
K2 SYNCB H
K2 SYNC (1) H
74 LS74 E9
SYNC
K5 PH 3 L
K1 WIAK H
+3V
K2 IAK (1) H
IAK
K5 PH 1 L
K1 WDAL 15 H
K1 WDAL 14 H
K1 WDAL 13 H
74 LS21 E26
K2 BS7 H
K1 WDIN H
8097 E20
K2 DIN H
K3 FDIN (0) H
74 LS08 E16
K2 REC H
+5V
RES PACK E36
680 330
1 BV2 BDAL 15 L
2 BU2 BDAL 14 L
16 BT2 BDAL 13 L
14 BS2 BDAL 12 L
13 BR2 BDAL 11 L
15 BP2 BDAL 10 L
19 BN2 BDAL 09 L
17 BM2 BDAL 08 L
13 BL2 BDAL 07 L
11 BK2 BDAL 06 L
10 BJ2 BDAL 05 L
12 BH2 BDAL 04 L
15 BF2 BDAL 03 L
14 BE2 BDAL 02 L
RES PACK E1
680 330
6 AN2 BIAKO L
7 AP2 BBS7 L
15 AS2 BDMGO L
14 AT2 BINIT L
14 AF2 BRPLY L
10 AA1 J1-35
9 AB1 J1-36
11 AC1 J1-33
13 AE2 B DOUT L
12 AK2 B WTBT L
15 AH2 BDIN L
11 AJ2 B SYNC L
12 AD1 J1-34
13 AL2 BIRQ L
RES PACK E14
680 330
1 AV2 BDAL 01 L
6 AU2 BDAL 00 L
19 AN1 BDMR L
10 AP1 B HALT L
11 BA1 B DCOK H
7 BB1 B POK H
15 BN1 B SACK L
14 BR1 B EVNT L
12 AR1 J1-9
13 BP1 J2-27
13 +3V SOURCE
15
14
12
8
8
8

K2

REVISIONS		
CHK	CHANGE NO.	REV.

TITLE LSI-11 CPU
SIZE D
CODE CS
NUMBER M7270-0-1
REV. H
SCALE
SHEET 2 OF 6
DIST.

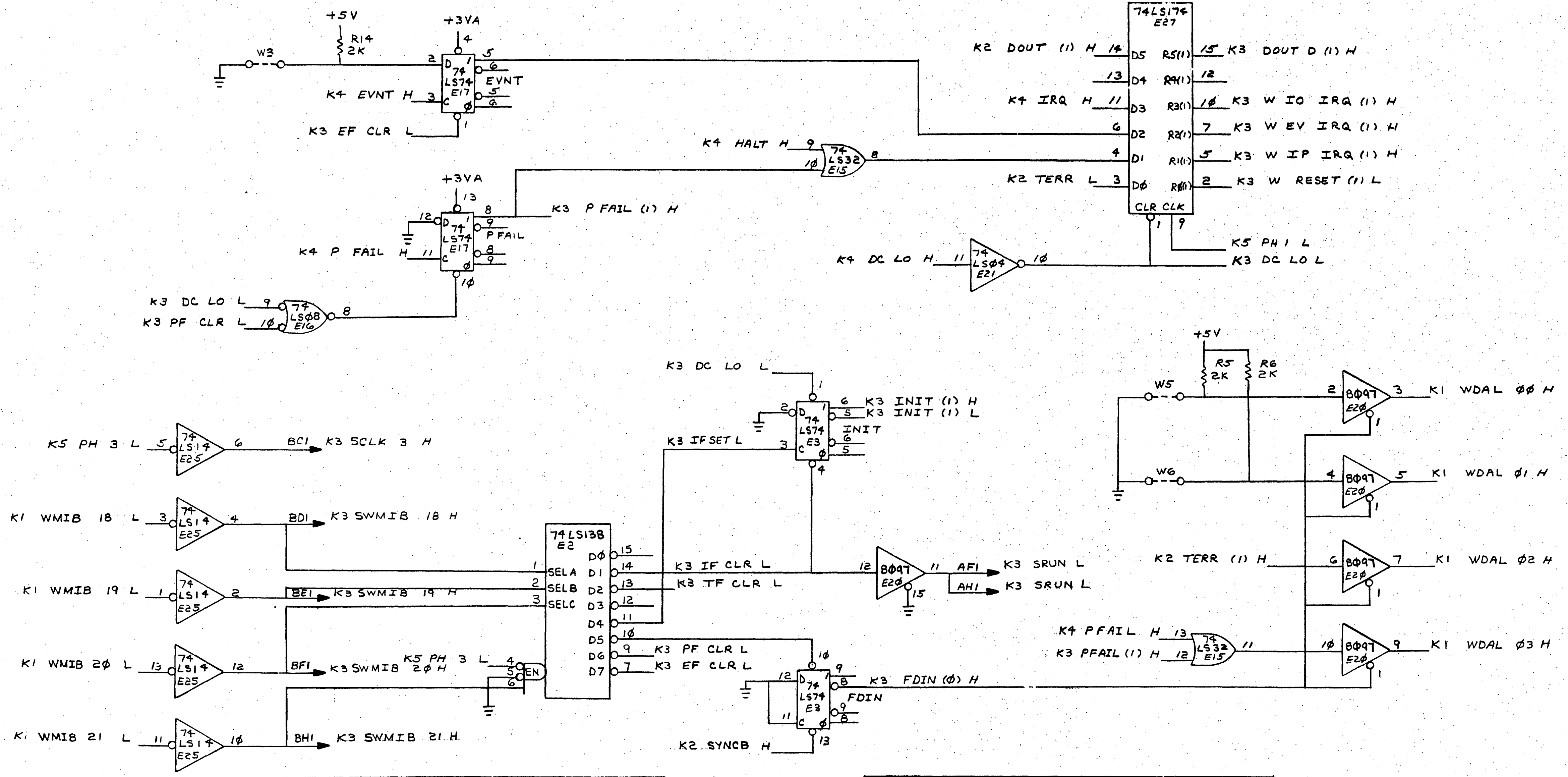
+5V
R14 2K
W3
+3VA
74LS74 E17
EVNT
K4 EVNT H
K3 EF CLR L
+3VA
74LS74 E17
P FAIL
K3 P FAIL (1) H
K4 P FAIL H
K3 DC LO L
K3 PF CLR L
74LS08 E16
K4 HALT H
74LS32 E15
74LS174 E27
K2 DOUT (1) H
D5 R5(1)
K3 DOUT D (1) H
D4 R4(1)
K4 IRQ H
D3 R3(1)
K3 W IO IRQ (1) H
D2 R2(1)
K3 W EV IRQ (1) H
D1 R1(1)
K3 W IP IRQ (1) H
K2 TERR L
D0 R0(1)
K3 W RESET (1) L
CLR CLK
K5 PH 1 L
K3 DC LO L
K4 DC LO H
74LS04 E21
K3 DC LO L
74LS74 E3
INIT
K3 INIT (1) H
K3 INIT (1) L
K3 IF SET L
K5 PH 3 L
74LS14 E25
BC1
K3 SCLK 3 H
K1 WMIB 18 L
BD1
K3 SWMIB 18 H
K1 WMIB 19 L
BE1
K3 SWMIB 19 H
K1 WMIB 20 L
BF1
K3 SWMIB 20 H
K1 WMIB 21 L
BH1
K3 SWMIB 21 H
74LS138 E2
SEL A
SEL B
SEL C
D0 D1 D2 D3 D4 D5 D6 D7
EN
K5 PH 3 L
K3 IF CLR L
K3 TF CLR L
K3 PF CLR L
K3 EF CLR L
8097 E20
AF1
AH1
K3 SRUN L
K3 SRUN L
74LS74 E3
FDIN
K3 FDIN (0) H
K2 SYNCB H
+5V
R5 2K
R6 2K
W5
W6
8097 E20
K1 WDAL 00 H
K1 WDAL 01 H
K2 TERR (1) H
K1 WDAL 02 H
K4 PFAIL H
K3 PFAIL (1) H
74LS32 E15
K1 WDAL 03 H

JUMPER TABLE

JUMPER	FUNCTION WHEN INSTALLED	FACTORY CONFIGURATION
W1	CRYSTAL CLOCK	I
W3	DISABLE EVENT LINE INTERRUPT	R
W5	POWER UP SELECT	R
W6	POWER UP SELECT	R

POWER-UP MODES

MODE	JUMPERS W6	JUMPERS W5	MODE SELECT
0	R	R	PC AT 24 AND PS AT 26, OR HALT MODE
1	R	I	ODT MICROCODE
2	I	R	PC AT 173000 FOR USER BOOTSTRAP
3	I	I	SPECIAL PROCESSOR MICROCODE (NOT IMPLEMENTED)

NOTE: R = JUMPER REMOVED, I = JUMPER INSTALLED

K3

REVISIONS		
CHK	CHANGE NO.	REV.

TITLE LSI-11 CPU
SIZE D
CODE CS
NUMBER M7270-0-
REV. H
SCALE
SHEET 3 OF 6
DIST.

NOTES:
1. THE WAKE UP CIRCUIT MAY BE DISABLED BY REMOVING C81.

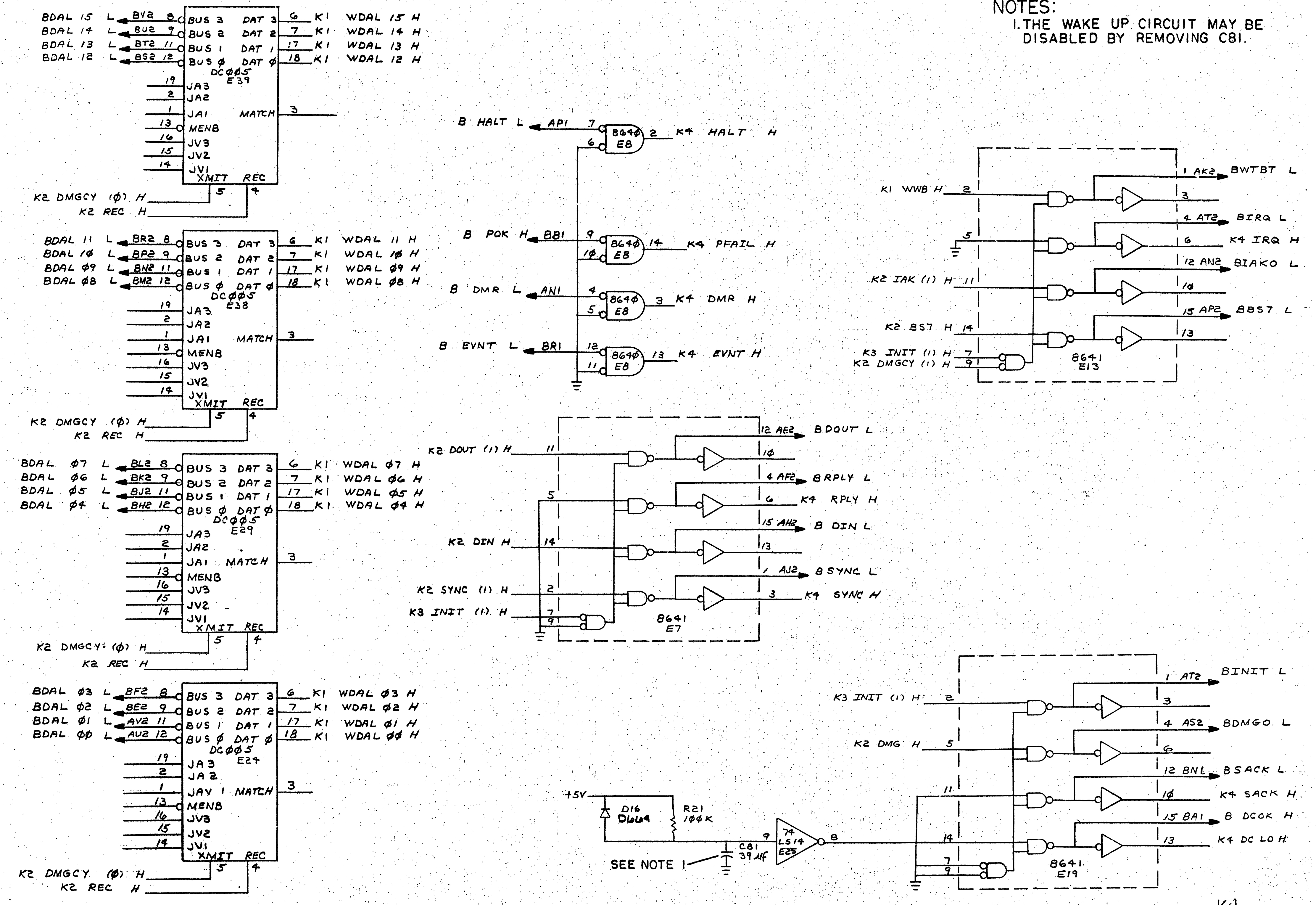
BDAL 15 L
BDAL 14 L
BDAL 13 L
BDAL 12 L
BV2
BU2
BT2
BS2
BUS 3
BUS 2
BUS 1
BUS 0
DAT 3
DAT 2
DAT 1
DAT 0
DC005
E39
JA3
JA2
JA1
MENB
JV3
JV2
JV1
XMIT
REC
MATCH
K1 WDAL 15 H
K1 WDAL 14 H
K1 WDAL 13 H
K1 WDAL 12 H
K2 DMGCY (0) H
K2 REC H
BDAL 11 L
BDAL 10 L
BDAL 09 L
BDAL 08 L
BR2
BP2
BN2
BM2
E38
K1 WDAL 11 H
K1 WDAL 10 H
K1 WDAL 09 H
K1 WDAL 08 H
BDAL 07 L
BDAL 06 L
BDAL 05 L
BDAL 04 L
BL2
BK2
BJ2
BH2
E29
K1 WDAL 07 H
K1 WDAL 06 H
K1 WDAL 05 H
K1 WDAL 04 H
BDAL 03 L
BDAL 02 L
BDAL 01 L
BDAL 00 L
BF2
BE2
AV2
AU2
E24
K1 WDAL 03 H
K1 WDAL 02 H
K1 WDAL 01 H
K1 WDAL 00 H
B HALT L
AP1
8640
E8
K4 HALT H
B POK H
BB1
K4 PFAIL H
B DMR L
AN1
K4 DMR H
B EVNT L
BR1
K4 EVNT H
K1 WWB H
K2 IAK (1) H
K2 BS7 H
K3 INIT (1) H
K2 DMGCY (1) H
AK2 BWTBT L
AT2 BIRQ L
K4 IRQ H
AN2 BIAKO L
AP2 BBS7 L
8641
E13
K2 DOUT (1) H
K2 DIN H
K2 SYNC (1) H
K3 INIT (1) H
AE2 BDOUT L
AF2 BRPLY L
K4 RPLY H
AH2 B DIN L
AJ2 B SYNC L
K4 SYNC H
8641
E7
K3 INIT (1) H
K2 DMG H
AT2 BINIT L
AS2 BDMGO L
BN1 BSACK L
K4 SACK H
BA1 B DCOK H
K4 DC LO H
8641
E19
+5V
D16
D664
R21
100K
C81
39 μf
SEE NOTE 1
74
LS14
E25

K4

REVISIONS		
CHK	CHANGE NO.	REV.

TITLE LSI-11 CPU

SIZE D
CODE CS
NUMBER M7270-0-1
REV. H
SCALE —
SHEET 4 OF 6
DIST.

100

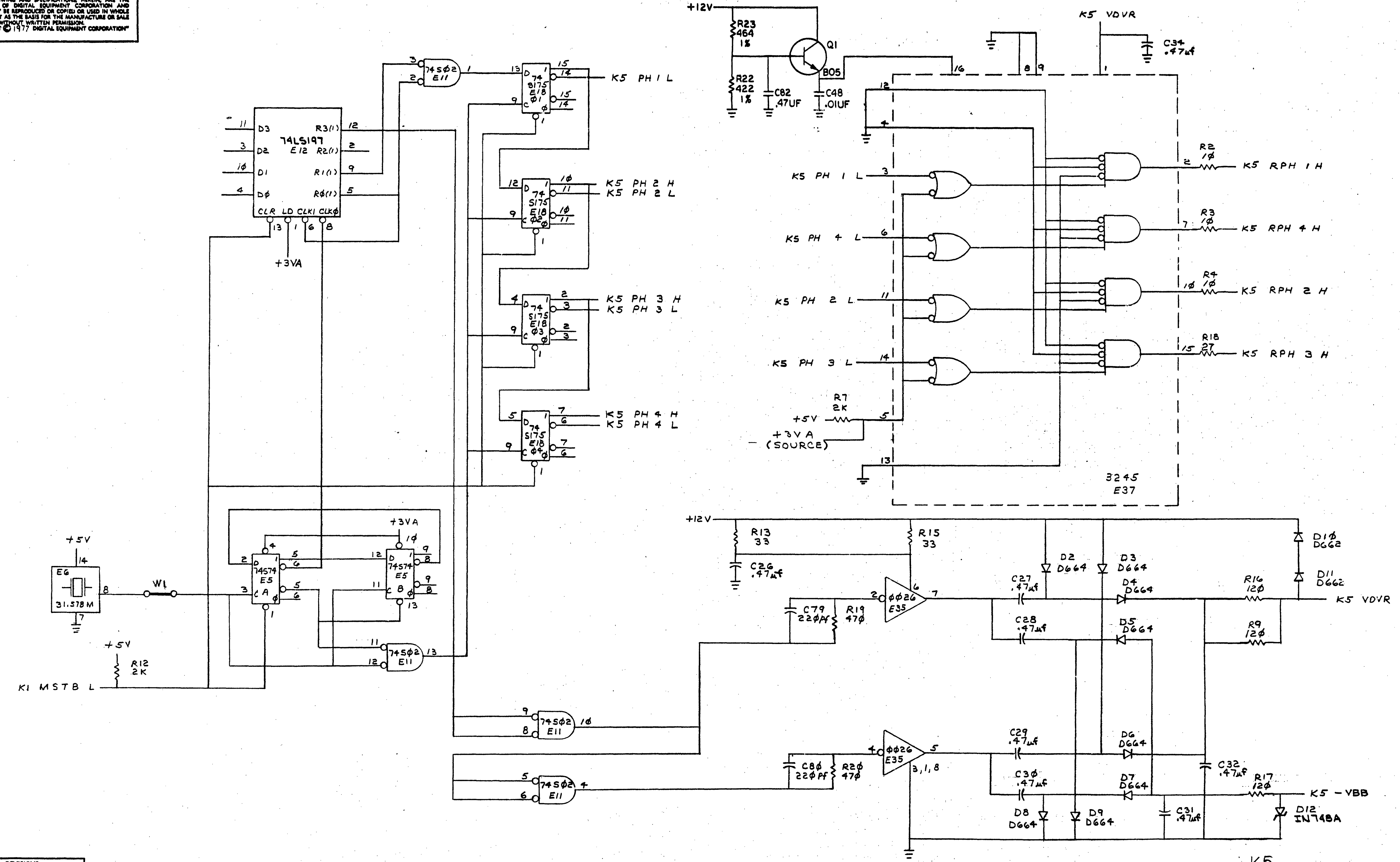

74LS197 E12
D3 D2 D1 D0
R3(1) R2(1) R1(1) R0(1)
CLR LD CLK1 CLK0
+3VA
74S02 E11
74S175 E18 01
74S175 E18 02
74S175 E18 03
74S175 E18 04
K5 PH 1 L
K5 PH 2 H
K5 PH 2 L
K5 PH 3 H
K5 PH 3 L
K5 PH 4 H
K5 PH 4 L
+5V
E6
31.578M
W1
74S74 E5
+3VA
K1 MSTB L
R12 2K
+12V
R23 464 1%
R22 422 1%
C82 .47UF
C48 .01UF
Q1
805
K5 VDVR
C34 .47uf
K5 PH 1 L
K5 PH 4 L
K5 PH 2 L
K5 PH 3 L
R7 2K
+5V
+3V A (SOURCE)
3245 E37
R2 10
K5 RPH 1 H
R3 10
K5 RPH 4 H
R4 10
K5 RPH 2 H
R18 27
K5 RPH 3 H
+12V
R13 33
R15 33
C26 .47uf
C79 220pf
R19 470
0026 E35
C27 .47uf
C28 .47uf
D2 D664
D3 D664
D4 D664
D5 D664
D10 D662
D11 D662
R16 120
R9 120
K5 VDVR
C80 220pf
R20 470
0026 E35
3,1,8
C29 .47uf
C30 .47uf
D6 D664
D7 D664
D8 D664
D9 D664
C31 .47uf
C32 .47uf
R17 120
K5 -VBB
D12 IN748A

K5

REVISIONS		
CHK	CHANGE NO.	REV.

TITLE LSI-11 CPU
SIZE D
CODE CS
NUMBER M7270-0-1
REV. H
SCALE
SHEET 5 OF 6
DIST.

101

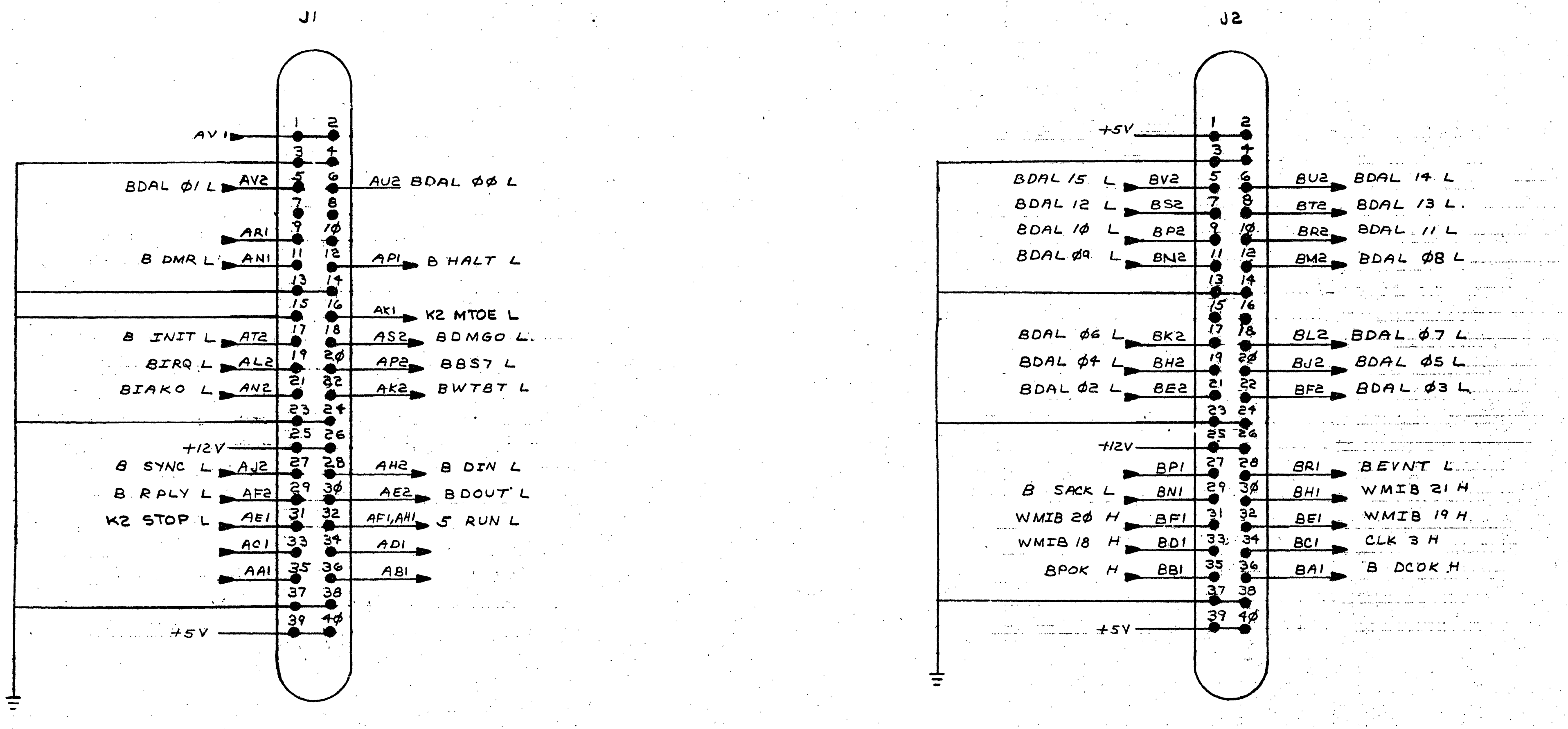
J1
AV1
BDAL 01 L
AV2
AU2
BDAL 00 L
AR1
B DMR L
AN1
AP1
B HALT L
AK1
K2 MTOE L
B INIT L
AT2
AS2
BDMGO L
BIRQ L
AL2
AP2
BBS7 L
BIAKO L
AN2
AK2
BWTBT L
+12V
B SYNC L
AJ2
AH2
B DIN L
B RPLY L
AF2
AE2
B DOUT L
K2 STOP L
AE1
AF1,AH1
5 RUN L
AC1
AD1
AA1
AB1
+5V
J2
+5V
BDAL 15 L
BV2
BU2
BDAL 14 L
BDAL 12 L
BS2
BT2
BDAL 13 L
BDAL 10 L
BP2
BR2
BDAL 11 L
BDAL 09 L
BN2
BM2
BDAL 08 L
BDAL 06 L
BK2
BL2
BDAL 07 L
BDAL 04 L
BH2
BJ2
BDAL 05 L
BDAL 02 L
BE2
BF2
BDAL 03 L
+12V
BP1
BR1
B EVNT L
B SACK L
BN1
BH1
WMIB 21 H
WMIB 20 H
BF1
BE1
WMIB 19 H
WMIB 18 H
BD1
BC1
CLK 3 H
BPOK H
BB1
BA1
B DCOK H
+5V

REVISIONS
CHK | CHANGE NO. | REV.

TITLE LSI-11 CPU
SIZE D
CODE CS
NUMBER M7270-0-1
REV. H
SCALE 2/1
SHEET 6 OF 6
DIST.

WIRE TABLE

ITEM NO.	DESCRIPTION AWG	DESCRIPTION COLOR	FROM POINT	FROM CONNECTION	FROM TERM	TO POINT	TO CONNECTION	TO TERM	PRECUT LENGTH	REMARKS
4	18	YEL	—	S1-4	—	2	P1-3	6		
~~4~~	~~18~~	~~BRN~~	~~—~~	~~S1-7~~	~~—~~	~~3~~	~~P1-6~~ 6	~~6~~		
14	14	GRN/YEL	4	P1-7	6	1	—	9		GND
12	18	WHT	6	P3-1	2	5	P1-1	16		
4		BLU	—	S1-6	SLDR					
13		BLU				—	S1-1	SLDR		JUMPER
4		VIO	9	P1-2	16					
12		WHT				10	P2-4	6		
11		RED	8	P3-3	2	7	P1-8	16		
4		WHT	—	S1-3	SLDR					
12		WHT				19	—	7		
11		RED	18	P2-3	6					
~~4~~		~~GRN~~	~~—~~	~~S1-9~~	~~—~~	~~18~~	~~P1-2~~	~~6~~		
11		RED	12	P2-1	6	11	P1-5	16		
4		GRY	—	S1-2	SLDR					
11		RED				18	P4-2	2		
12		WHT	17	P4-1	2	—	S1-5	SLDR		
4		GRN	—	S1-8	—					JUMPER
4		RED				16	—	7		
12	18	WHT	16	P2-6	6					
4	18	GRN	15	P1-4	16	—	S1-9	—		
15	18	BLK				3	P1-6	16		JUMPER
4	18	BRN	—	S1-7	—					

NOTES:
1. USE TIE WRAPS (X) ITEM #8 APPROXIMATELY EVERY FOUR (4) INCHES WHEN NECESSARY, AND AT EVERY BREAKOUT POINT SHOWN.

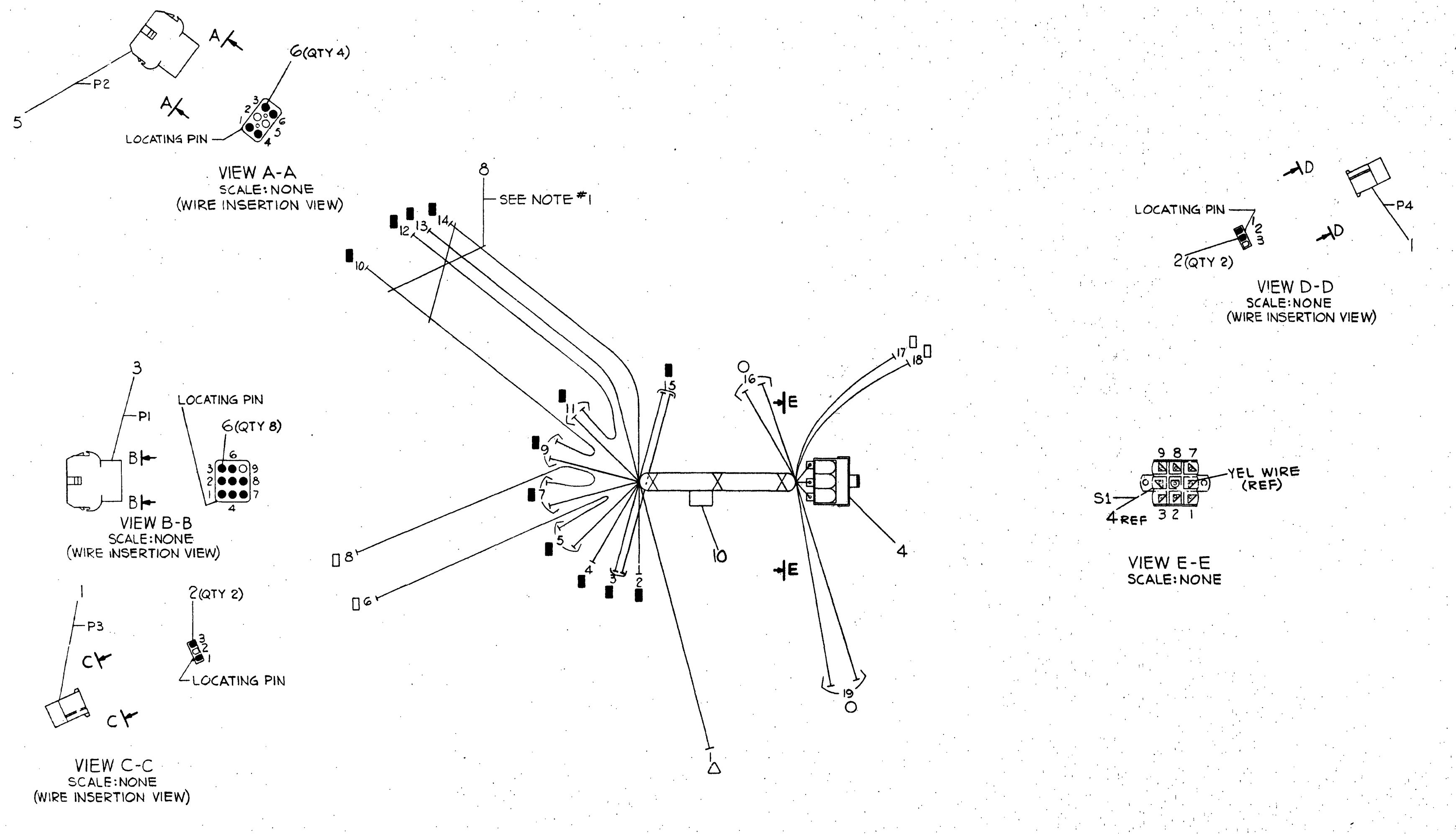
A
A
P2
5
6(QTY 4)
2
3
1
6
5
4
LOCATING PIN
VIEW A-A
SCALE: NONE
(WIRE INSERTION VIEW)
8
SEE NOTE #1
12
13
14
10
11
9
7
5
4
3
1
2
15
8
6
16
E
17
18
10
4
E
19
LOCATING PIN
2
3
D
D
P4
1
2(QTY 2)
VIEW D-D
SCALE: NONE
(WIRE INSERTION VIEW)
9 8 7
YEL WIRE (REF)
S1
4 REF
3 2 1
VIEW E-E
SCALE: NONE
3
P1
B
B
LOCATING PIN
6(QTY 8)
6
3
2
1
9
8
7
4
VIEW B-B
SCALE: NONE
(WIRE INSERTION VIEW)
1
P3
C
C
2(QTY 2)
3
2
1
LOCATING PIN
VIEW C-C
SCALE: NONE
(WIRE INSERTION VIEW)

DO NOT REDUCE
SCALE
0IN 6IN 12IN
FOR MANUFACTURING PURPOSES ONLY

SYM	QTY	DESCRIPTION	DWG./PART NO.	ITEM NO.
▮	6	PIN CONTACT	1212169-02	16
	A/R	WIRE STRD 18 AWG BLK	9107360-00	15
	A/R	WIRE, STRD, 14 AWG GRN/YEL	9107777-54	14
	A/R	WIRE, STRD, 18 AWG BLU	9107786-66	13
	A/R	WIRE, STRD, 18 AWG WHT	9107786-99	12
	A/R	WIRE, STRD, 18 AWG RED	9107786-22	11
	1	LABEL, MFG	9009532-00	10
△	1	TERM, RING #10 BLUE	9007928-00	9
X	A/R	TIE, CABLE	9007031-00	8
○	2	TERM, QUICK CONN	9007969-00	7
▮	6	PIN, CONTACT	1212169-01	6
	1	CONN, UNIV 6 PIN	1212168-05	5
	1	SWITCH, SLIDE	1214155	4
	1	CONN., UNIV 9 PIN	1212168-07	3
▯	4	SKT, TERMINAL	1209379-06	2
	2	CONN., SKT 3 PIN	1210821-03	1

QUANTITY & VARIATION

UNLESS OTHERWISE SPECIFIED DIMENSIONS ARE IN INCHES

ANGLES ±0° 30'	CLASS OF ACCURACY (CHECK ONE)	OVER 0 TO 0.2	OVER 0.2 TO 1.2	OVER 1.2 TO 4.0	OVER 4.0 TO 2.0	OVER 10.0 TO 40.0	OVER 40.0 TO 80.0
SURFACE QUALITY IN MICROINCHES	MEDIUM ☐	±.004	±.008	±.012	±.016	±.024	±.04
	PREFERRED ☐	±.012	±.016	±.025	±.04	±.060	±0.1

THIRD ANGLE PROJECTION
REMOVE BURRS AND BREAK SHARP CORNERS
DO NOT SCALE DWG
MATERIAL SEE PARTS LIST
FINISH

DRN. Pinkard	4 FEB 78	
CHK'D JB		
ENG. M. Rosse		
PROJ. ENG.		
PROD.		
NEXT HIGHER ASSY.	E-UA-7015569-0-0	
SCALE	1/1	
SHEET 1	OF 1	

FIRST USED ON VT72
digital
TITLE
HARNESS, A.C. POWER
SIZE E | CODE IA | NUMBER 7015568-0-0 | REV. A
DIST.

MK 1

REVISIONS

CHK	CHANGE NO.	REV.
JT.	7015673-MK001	A

H. Olmsmore 6-14-78
D.O. CONNELL

DEC FORM NO.
DRK 100-0

SIZE D CODE IA NUMBER 7015543-0-0 REV. B

WIRE TABLE

ITEM NO.	DESCRIPTION AWG	DESCRIPTION COLOR	FROM POINT	FROM CONNECTION	FROM TERM	TO POINT	TO CONNECTION	TO TERM	REMARKS
1	18	ORN	1	P10-A	4&5	18	P2-3	2+3	+5V
		YEL	2	P10-B					+5V
		GRN	3	P10-C		17	P2-6	2+9	+5V
		BLU	4	P10-D		16	P2-9	2+9	+5V
		VIO	5	P10-G		15	P2-2	2+3	GND
		GRY	6	P10-H					GND
		WHT	7	P10-J		14	P2-5	2+9	GND
		BLK	8	P10-K		13	P2-8	2+9	GND
		BRN	9	P10-L		12	P2-1	2+9	+12V
	18	RED	10	P10-M	4&5	11	P2-7	2&9	+12VGND

NOTES:

1. ADHERE FOAM TAPE (ITEM #6) ON TO RIBBON CABLE (ITEM #1).
2. BROWN AND RED WIRES (ADJACENT TO ORANGE WIRE), ON THE EDGE OF THE RIBBON CABLE (ITEM #1), TO BE REMOVED.

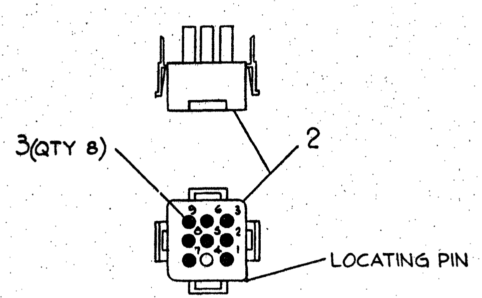

P2
SCALE: NONE

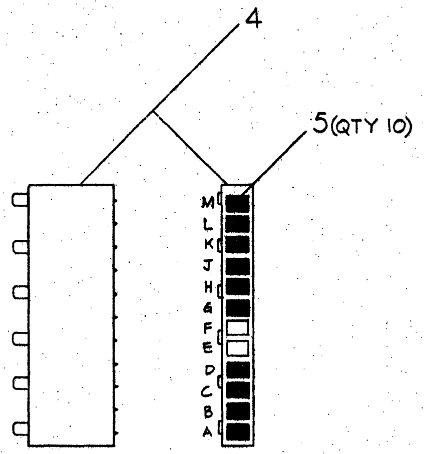

P10
SCALE: NONE

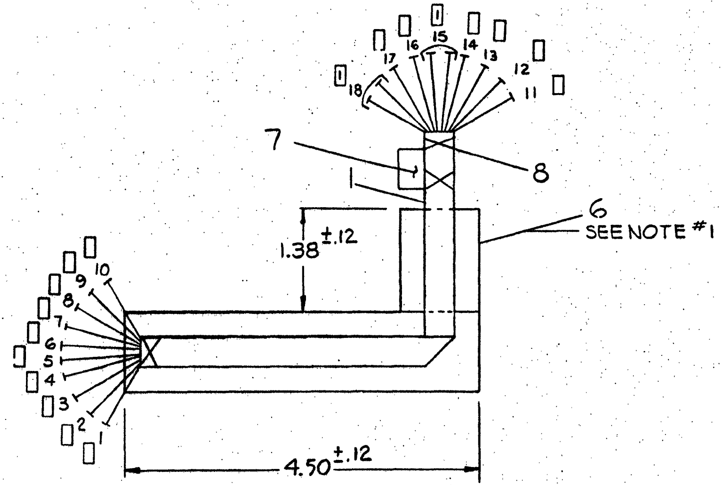

DO NOT REDUCE
SCALE

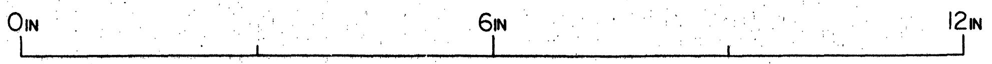

FOR MANUFACTURING PURPOSES ONLY

SYM	QTY	DESCRIPTION	DWG./PART NO.	ITEM NO.
▯	6	CONTACT PIN, FEMALE	1212170-00	9
X	3	TIE, CABLE	9007031-00	8
	1	LABEL, MFG	9009532-00	7
	A/R	FOAM TAPE	9008228-00	6
▯	10	CONTACT PIN, FEMALE	1212203-00	5
	1	CONN, HSG 12 POS	1212620-01	4
▯	2	CONTACT PIN, FEMALE	1212170-02	3
	1	CONN, PLUG, 9 PIN	1212167-04	2
	A/R	CABLE, FLAT 18 AWG 12 COND	1700057-00	1

QUANTITY & VARIATION

UNLESS OTHERWISE SPECIFIED DIMENSIONS ARE IN INCHES

ANGLES ±0° 30'

SURFACE QUALITY IN MICROINCHES

~~CLASS OF ACCURACY (CHECK ONE)~~	OVER 0 TO 0.2	OVER 0.2 TO 1.2	OVER 1.2 TO 4.0	OVER 4.0 TO 12.0	OVER 12.0 TO 40.0	OVER 40.0 TO 80.0
MEDIUM ☐	±.004	±.008	±.012	±.016	±.024	±.04
PREFERRED ☐	±.012	±.016	±.025	±.04	±.063	±0.1

THIRD ANGLE PROJECTION

REMOVE BURRS AND BREAK SHARP CORNERS

DO NOT SCALE DWG

MATERIAL SEE PARTS LIST
FINISH —

DRN.	Rinkard	23 FEB 78
CHK'D	Brigham	1 MAR 78
ENG.	M. Roose	8 MAR 78
PROJ. ENG.	M. Roose	8 MAR 78
PROD.	Bob Cook	8 MAR 78

NEXT HIGHER ASSY. E-UA-7015569-0-0
SCALE 1/1
SHEET OF

FIRST USED ON VT72
digital

TITLE
HARNESS,
D.C. POWER

SIZE D
CODE IA
NUMBER 7015543-0-0
REV. B
DIST.

MK

REVISIONS

CHK	CHANGE NO.	REV.			
	7015673-MK001	A	H. Demamore 6-15-78	D.O'CONNELL	Dan O'Connell 6-21-78
	VT72-MK005	B	H. Demamore 28-DEC-78	D.O'CONNELL	D. O'Connell 1-3-79

MAKEPLACE P-1655

DEC FORM NO. DRD 100-C

104

WIRE TABLE

ITEM NO.	DESCRIPTION		FROM			TO			REMARKS
	AWG	COLOR	POINT	CONNECTION	TERM	POINT	CONNECTION	TERM	
1	18	——		T1-4		4	P5-8	14+12	
	18	——		T1-2		2	P5-5	14+12	
	18	——		T1-3		3	P5-2	14+12	
3	18	YEL	5	P8-5	2,7	13		11	
1	14	——		T1-7					
5	18	RED	6	P8-4	2,7	11		8	
5	18	RED	8	P8 2	2,7				
4	18	BLK	7	P8-3	2,7	12		9	
6	14	RED	9		10	10		8	
1	14	——		T1-6		14		8	
	14	——		T1-5		15		11	
3	18	YEL	19	P8-6	2,7				
4	18	BLK	16		8	17	P8-8	2,7	
4	18	BLK				18	P8-7	2,7	
1	18	——		T1-1		1	P5-4	14+12	
~~4~~	~~18~~	~~BLK~~	~~20~~	~~P5-6~~	~~14+12~~				

NOTES:

1. .015" × 1.75" COPPER BAND AROUND XFMER.
2. C1 & D1 ARE REFERENCED AS BEING A CAPACITOR & A DIODE ON E-UA-7015569-0-0

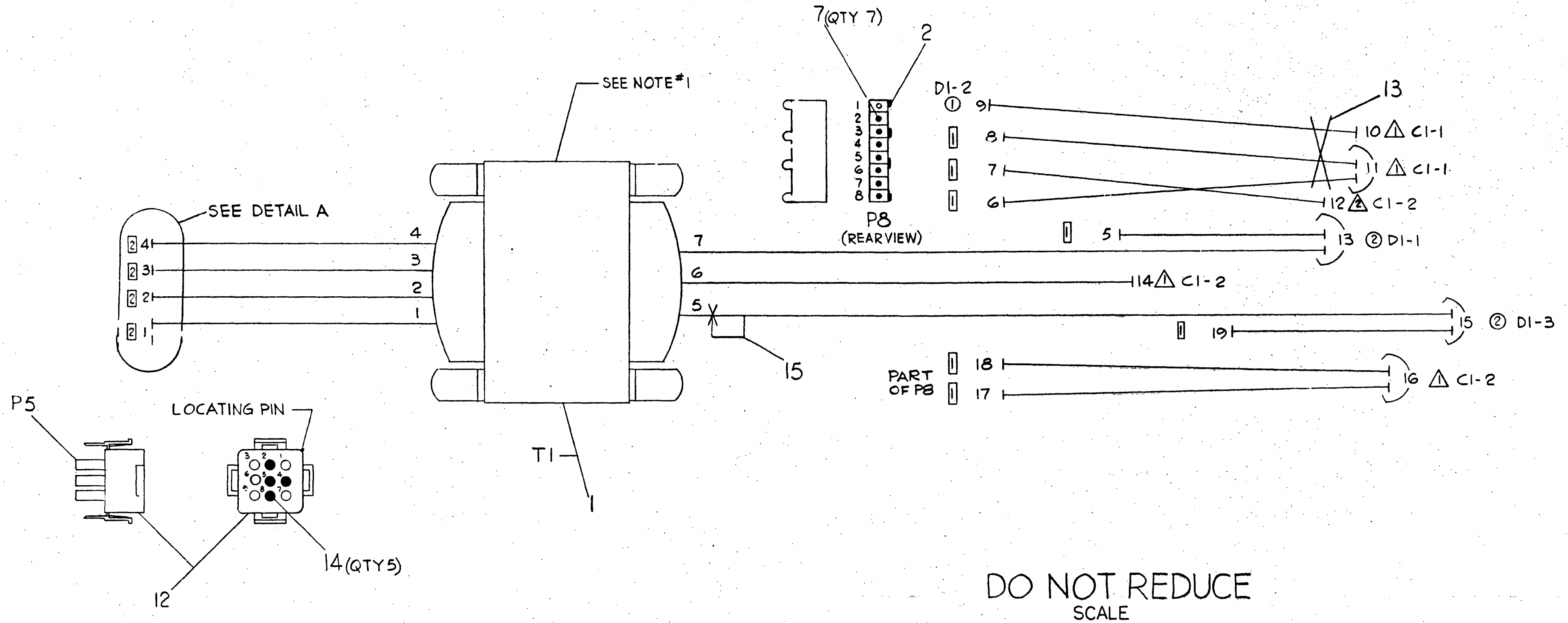

DETAIL A
WIRE INSERTION VIEW
SCALE: NONE

DO NOT REDUCE
SCALE

0IN 6IN 12IN

FOR MANUFACTURING PURPOSES ONLY

SYM	QTY	DESCRIPTION	DWG./PART NO.	ITEM NO.
	1	LABEL, MFG	9009532-00	15
▯2	4	CONTACT SKT, 14-20 AWG	1212170-02	14
X	2	TIE, CABLE	9007031-00	13
	1	CONN, PLUG 9 PIN FEMALE	1212167-04	12
②	2	TERMINAL, QUICKCONN YEL	9007920-00	11
①	1	TERMINAL, QUICKCONN BLU	9007969-00	10
⚠2	1	TERMINAL RING RED	9007930-00	9
⚠	4	TERMINAL RING BLU	9007928-00	8
▯	7	TERMINAL CRIMP	1212203-00	7
	A/R	WIRE #14 AWG (RED)	9107370-22	6
	A/R	WIRE #18 AWG (RED)	9107360-22	5
	A/R	WIRE #18 AWG (BLK)	9107360-00	4
	A/R	WIRE #18 AWG (YEL)	9107360-44	3
	1	CONNECTOR, HSG, 8 PIN	1212620-00	2
	1	TRANSFORMER	1612497-01	1

QUANTITY & VARIATION

UNLESS OTHERWISE SPECIFIED DIMENSIONS ARE IN INCHES

ANGLES ±0° 30'	CLASS OF ACCURACY (CHECK ONE)	NOMINAL DIMENSION RANGE INCHES					
SURFACE QUALITY IN MICROINCHES		OVER 0 TO 0.2	OVER 0.2 TO 1.2	OVER 1.2 TO 4.0	OVER 4.0 TO 12.0	OVER 12.0 TO 40.0	OVER 40.0 TO 80.0
	MEDIUM ☐	±.004	±.008	±.012	±.016	±.024	±.04
	PREFERRED ☐	±.012	±.016	±.025	±.04	±.063	±0.1

THIRD ANGLE PROJECTION

REMOVE BURRS AND BREAK SHARP CORNERS

DO NOT SCALE DWG

MATERIAL SEE PARTS LIST

FINISH

DRN. Pinkard	6 JAN 78	FIRST USED ON VT72
CHK'D	8 MAR 78	
ENG. M. Roose	8 MAR 78	
PROJ. ENG.	8 MAR 78	
PROD.	8 MAR 78	

digital

TITLE
TRANSFORMER
ASSY

NEXT HIGHER ASSY.
E-UA-7015569-0-0

SCALE 1/1
SHEET 1 OF 1

SIZE	CODE	NUMBER	REV.
D	IA	7015517-0-0	A

DIST.

REVISIONS

CHK	CHANGE NO.	REV.
	7015673-MK001	A

7/Densmore 6-15-78
D.O'CONNELL

DEC FORM NO.
DRD 100-C

MK 1

105

WIRE TABLE

ITEM NO	DESCRIPTION		FROM			TO		
	AWG	COLOR	POINT	CONNECTION	TERM	POINT	CONNECTION	TERM
1	22	BLK	1	—	4	4	P1-1	2 & 3
	TYP	GRY	2	—	4	3	P1-2	2 & 3

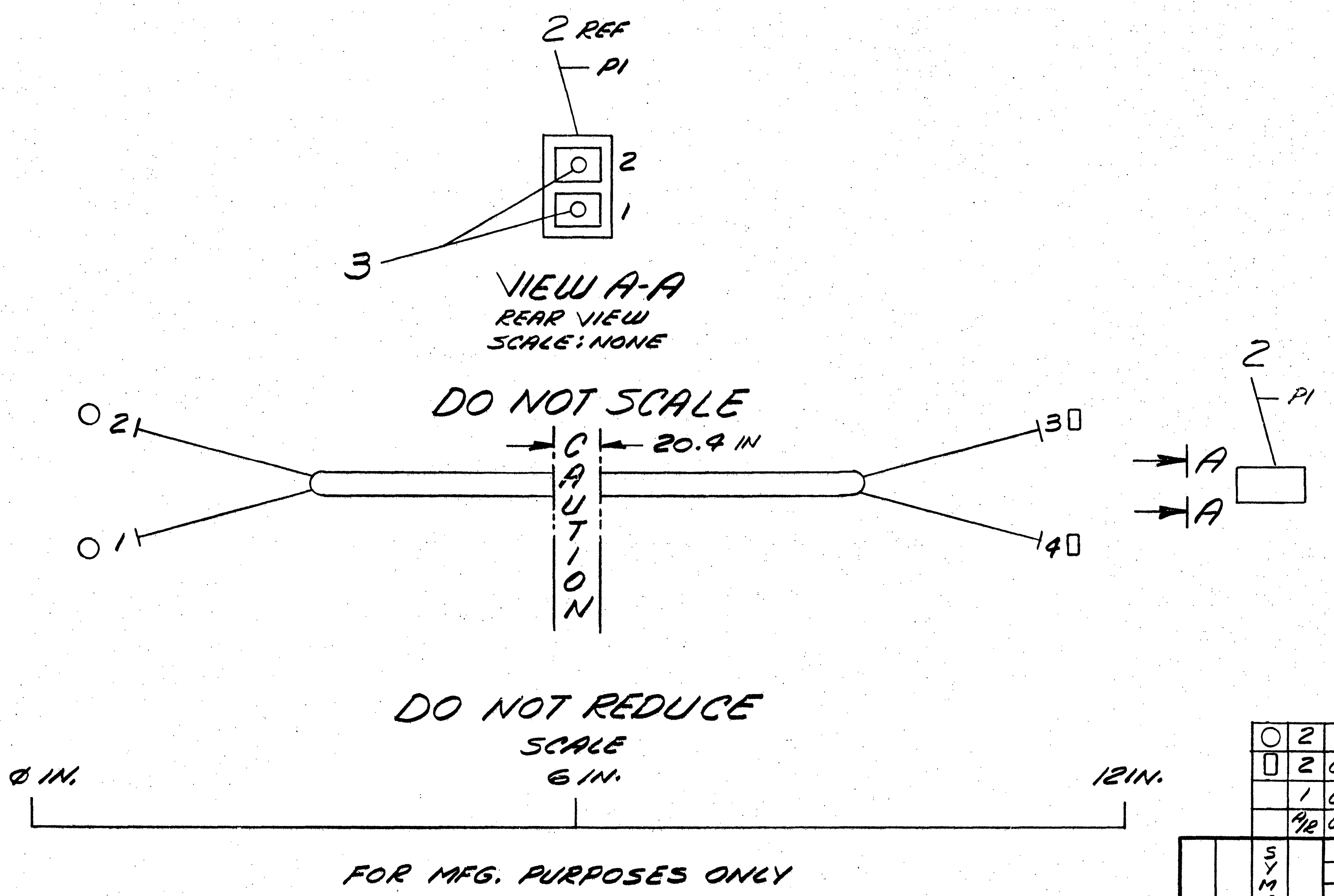
2 REF
P1
2
1
3
VIEW A-A
REAR VIEW
SCALE: NONE
DO NOT SCALE
2
1
C A U T I O N
20.4 IN
3
4
2
P1
A
A
DO NOT REDUCE
SCALE
0 IN.
6 IN.
12 IN.
FOR MFG. PURPOSES ONLY

SYMBOL	QTY	DESCRIPTION	DWG./PART NO.	ITEM NO.
○	2	TERM, QUICK CONNECT	9007970-00	4
▯	2	CONTACT, PIN CRIMP, FEM	1212203-00	3
	1	CONN. HGS 2 POSITION	1212620-03	2
	A/R	WIRE, #22 AWG STRD TWP BLK/GRY	9107420-08	1

QUANTITY & VARIATION

UNLESS OTHERWISE SPECIFIED DIMENSIONS ARE IN INCHES

ANGLES ±0° 30'

SURFACE QUALITY IN MICROINCHES

CLASS OF ACCURACY (CHECK ONE)	OVER 0 TO 0.2	OVER 0.2 TO 1.2	OVER 1.2 TO 4.0	OVER 4.0 TO 12.0	OVER 12.0 TO 40.0	OVER 40.0 TO 80.0
MEDIUM ☐	±.004	±.008	±.012	±.016	±.024	±.04
PREFERRED ☐	±.012	±.016	±.025	±.04	±.063	±0.1

THIRD ANGLE PROJECTION

REMOVE BURRS AND BREAK SHARP CORNERS

DO NOT SCALE DWG

MATERIAL SEE PARTS LIST

FINISH —

DRN		8-APR-76
CHK'D	Sid Roberts	30APR76
ENG.		30APR76
PROJ ENG.		30APR76
PROD.		30APR76

NEXT HIGHER ASSY. E-UA-VT71-0-0

SCALE 1/1

SHEET 1 OF 1

FIRST USED ON VT71

digital

TITLE

HARNESS, SPEAKER

SIZE C CODE IA NUMBER 7012279-0-0 REV.

DIST.

REVISIONS: REV. CHANGE NO. CHK

DEC FORM NO. DRC 100-C

106

D IA 7014607-0-0

WIRE TABLE

ITEM NO.	DESCRIPTION AWG	DESCRIPTION COLOR	FROM CONN	FROM WITH	TO CONN	TO WITH	REMARKS
4	26	BLK	P1-A	1&3	P2-VV	1&3	
	↑	BRN	P1-B	↑	P2-UU	↑	
		ORN	P1-C		P2-TT		
	↓	YEL	P1-D		P2-SS		
	26	GRN	P1-E		P2-RR		
	TWP	RED	P1-F		P2-PP		
	26	WHT	P1-PP		P2-F		
	26	BLU	P1-H		P2-NN		
	↑	VIO	P1-J		P2-MM		
		GRY	P1-K		P2-LL		
		WHT-BLK-GRY	P1-L		P2-KK		
		WHT-BRN	P1-M		P2-JJ		
		WHT-RED	P1-N		P2-HH		
		WHT-ORN	P1-P		P2-FF		
		WHT-YEL	P1-R		P2-EE		
		WHT-BLU	P1-T		P2-CC		
	↓	WHT-GRY	P1-V	↓	P2-AA	↓	
	26	WHT-RED-BLK	P1-W	1&3	P2-Z	1&3	
	18	BARE	PT-1	5	PT-2	5	DRAIN

ITEM NO.	DESCRIPTION AWG	DESCRIPTION COLOR	FROM CONN	FROM WITH	TO CONN	TO WITH	REMARKS
4	26	WHT-RED-BRN	P1-X	1&3	P2-Y	1&3	
	↑	WHT-RED-ORN	P1-Y	↑	P2-X	↑	
		WHT-RED-YEL	P1-Z		P2-W		
		WHT-RED-GRN	P1-AA		P2-V		
		WHT-RED-BLU	P1-BB		P2-U		
		WHT-RED-VIO	P1-CC		P2-T		
		WHT-RED-GRY	P1-DD		P2-S		
		WHT-BLK-BRN	P1-EE		P2-R		
		WHT-BLK-ORN	P1-FF		P2-P		
		WHT-BLK-YEL	P1-HH		P2-N		
		WHT-BLK-GRN	P1-JJ		P2-M		
		WHT-BLK-BLU	P1-KK		P2-L		
		WHT-BLK-VIO	P1-LL		P2-K		
		WHT-BLK	P1-MM		P2-J		
		WHT-BRN-ORN	P1-NN		P2-H		
		WHT-BRN-YEL	P1-PP		P2-E		
		WHT-BRN-GRN	P1-SS		P2-D		
		WHT-BRN-BLU	P1-TT		P2-C		
	↓	WHT-BRN-GRY	P1-UU	↓	P2-B	↓	
	26	WHT-BRN-VIO	P1-VV	1&3	P2-A	1&3	

LEGEND

NUMBER	DIM. "X" VARIATION	DIM. "Y" (PRECUT) REF
7014607-05	5 FT. ±1 IN.	5 FT. 2 IN

NOTES:

1. "THIS SIDE UP" STICKER ON P2 IS ON FAR SIDE.
2. SHRINK TUBING SHALL COVER ALL BARE WIRES.

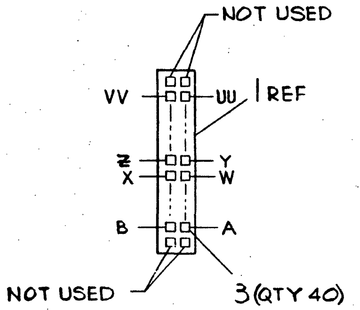

VIEW A-A
REAR VIEW
SCALE: NONE
(SHOWN WITH ITEM #2 & ITEM #4 REMOVED)

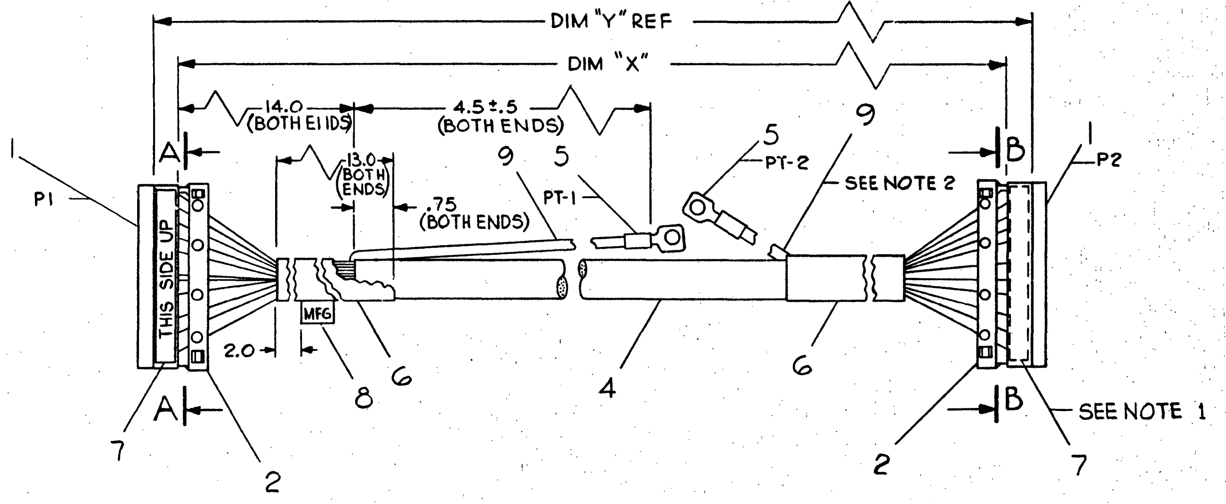

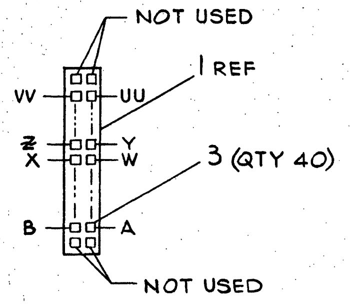

VIEW B-B
REAR VIEW
SCALE: NONE
(SHOWN WITH ITEM #2 & ITEM #4 REMOVED)

	DESCRIPTION	DWG./PART NO.	ITEM NO.
A/R	TUBING, SHRINK	9107255-00	9
1	LABEL, MFG.	9009532-00	8
2	STICKER, "THIS SIDE UP"	3611567-00	7
A/R	TUBING, SHRINK (BLK)	9107250-00	6
2	TERMINAL, RING TONGUE #10	9007930-00	5
A/R	CABLE, 40 COND. (26 AWG)	1700059-01	4
80	SOCKET, CRIMP	1210089-05	3
2	STRAIN RELIEF	1211166-00	2
2	CONN., HSG (44 PIN)	1210918-15	1

QUANTITY & VARIATION

UNLESS OTHERWISE SPECIFIED DIMENSIONS ARE IN INCHES

ANGLES ±0° 30'
SURFACE QUALITY IN MICROINCHES

CLASS OF ACCURACY (CHECK ONE)	OVER 0 TO 0.2	OVER 0.2 TO 1.2	OVER 1.2 TO 4.0	OVER 4.0 TO 12.0	OVER 12.0 TO 40.0	OVER 40.0 TO 80.0
MEDIUM ☐	±.004	±.008	±.012	±.016	±.024	±.04
PREFERRED ■	±.012	±.016	±.025	±.04	±.063	±0.1

THIRD ANGLE PROJECTION
REMOVE BURRS AND BREAK SHARP CORNERS
DO NOT SCALE DWG
MATERIAL SEE PARTS LIST
FINISH —/—/—

DRN.	Rinkard	23Sep77
CHK'D	S. Roberts	7Oct77
ENG.	M. Rosen	2-3-78
PROJ. ENG.	[illegible]	2-3-78
PROD.	[illegible]	2-3-78

NEXT HIGHER ASSY. E-UA-VT72-0-0
SCALE NONE
SHEET 1 OF 1

FIRST USED ON VT 72
digital

TITLE
CABLE, VT72
KEYBOARD

SIZE D CODE IA NUMBER 7014607-0-0 REV.
DIST.

REVISIONS
CHK CHANGE NO. REV.

DEC FORM NO. DRD 100-C

WIRE TABLE

ITEM NO	DESCRIPTION		FROM		TO	
	AWG	COLOR	CONNECTION	WITH	CONNECTION	WITH
9	22	RED			P2-3	3&4
	22	CLR			P2-2	3&4
	22	BLK			P2-1	3&4

NOTES:

~~1. DRAIN WIRE TO BE CUT BACK WITH OUTER JACKET.~~

2. ~~P1 IS LISTED AS "P8" ON RASTER DISPLAY P/N 3012537~~.

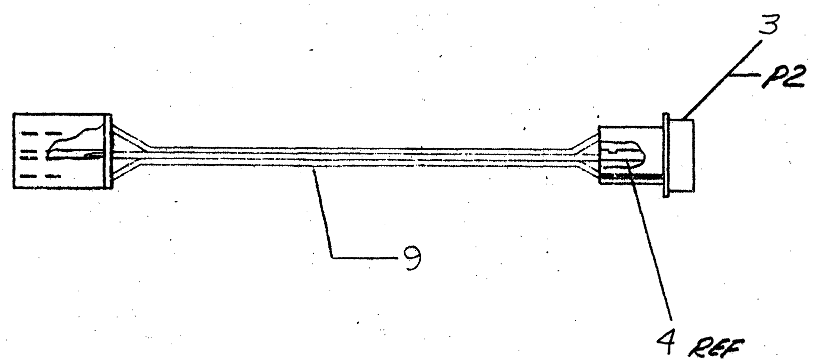

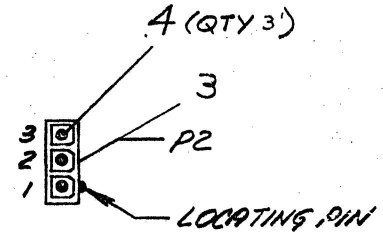

VIEW A-A
SCALE: NONE

1	CABLE, BRIGHTNESS POT	C-IA-7016415-0H.	9
~~1~~	~~CABLE TIES~~	~~9007031~~	8
~~1~~	~~CABLE, BRIGHTNESS POT~~	~~3012537-03~~	~~7~~
~~1~~	~~LABLE, MFG.~~	~~9009552-00~~	~~6~~
~~A/R~~	~~CABLE, 3COND. 22AWG~~	~~9107574~~	~~5~~
3	TERMINAL, CONTACT	1209378-06	4
1	HOUSING, SOCKET	1209351-03	3
~~3~~	~~LOCKING CLIP CONTACT~~	~~1213805-00~~	~~2~~
~~1~~	~~HOUSING, LOCKING CLIP~~	~~1213804-00~~	~~1~~
	DESCRIPTION	DWG./PART NO.	ITEM NO.

UNLESS OTHERWISE SPECIFIED DIMENSIONS ARE IN INCHES

ANGLES ±0° 30'	CLASS OF ACCURACY (CHECK ONE)	NOMINAL DIMENSION RANGE INCHES					
SURFACE QUALITY IN MICROINCHES		OVER 0 TO 0.2	OVER 0.2 TO 1.2	OVER 1.2 TO 4.0	OVER 4.0 TO 12.0	OVER 12.0 TO 40.0	OVER 40.0 TO 80.0
	MEDIUM ☐	±.004	±.008	±.012	±.016	±.024	±.04
	PREFERRED ☐	±.012	±.016	±.025	±.04	±.063	±0.1

QUANTITY & VARIATION

THIRD ANGLE PROJECTION

REMOVE BURRS AND BREAK SHARP CORNERS

DO NOT SCALE DWG

MATERIAL SEE PARTS LIST

FINISH —"—

DRN.	[illegible]	7-APR-76
CHK'D.	S. J. Roberts	24MAY76
ENG.	R. Camelio	24/May76
PROJ. ENG.	R. Camelio	24/May76
PROD.	[illegible]	24 May76

NEXT HIGHER ASSY. E-UA-VT71-Ø-Ø

SCALE NONE

SHEET 1 OF 1

FIRST USED ON VT71

digital

TITLE
CABLE,
BRIGHTNESS POT ASSY.

SIZE	CODE	NUMBER	REV.
C	IA	7012446-0-0	D

DIST.

REVISIONS

CHK	CHANGE NO.	REV.
[illegible]	VT71 - ØØØ4	A
N. Hamel 14-SEP-76		
R. CAMELIO		
R. Camelio 27-Sep-76		
J.C.	7012446-00001	B
[illegible] 9 FEB 77		
S. CROSS		
[illegible] 11 FEB 77		
D.C.	VT71 - 00019	C
[illegible] 22-NOV-77		
M. ROOSA		
M. Roosa 11/[illegible]/77		
[illegible]	7012446-MK002	D
H. Dunmore Ø5-FEB-79		
D.O'CONNELL		
D. O'Connell 2/15/79		

MAKEPEACE P 1393

DEC FORM NO.
DRC 100-C

MK

108

WIRE TABLE

ITEM	DESCRIPTION		FROM		TO		SIGNAL
NO.	AWG	COLOR	POINT	WITH	CONN	WITH	NAME
2	18	BLU		——	J1	SLDR	+5V
	↑	VIO		——	J2	↑	GND
		GRN		——	J3		+5V
		GRY		——	J4		GND
		YEL		——	J7		+5V
		WHT		——	J8		GND
		BRN		——	J9		+12V
		RED		——	J10		GND
	↓	ORN		——	J11	↓	+5V
	18	BLK		——	J12	SLDR	GND

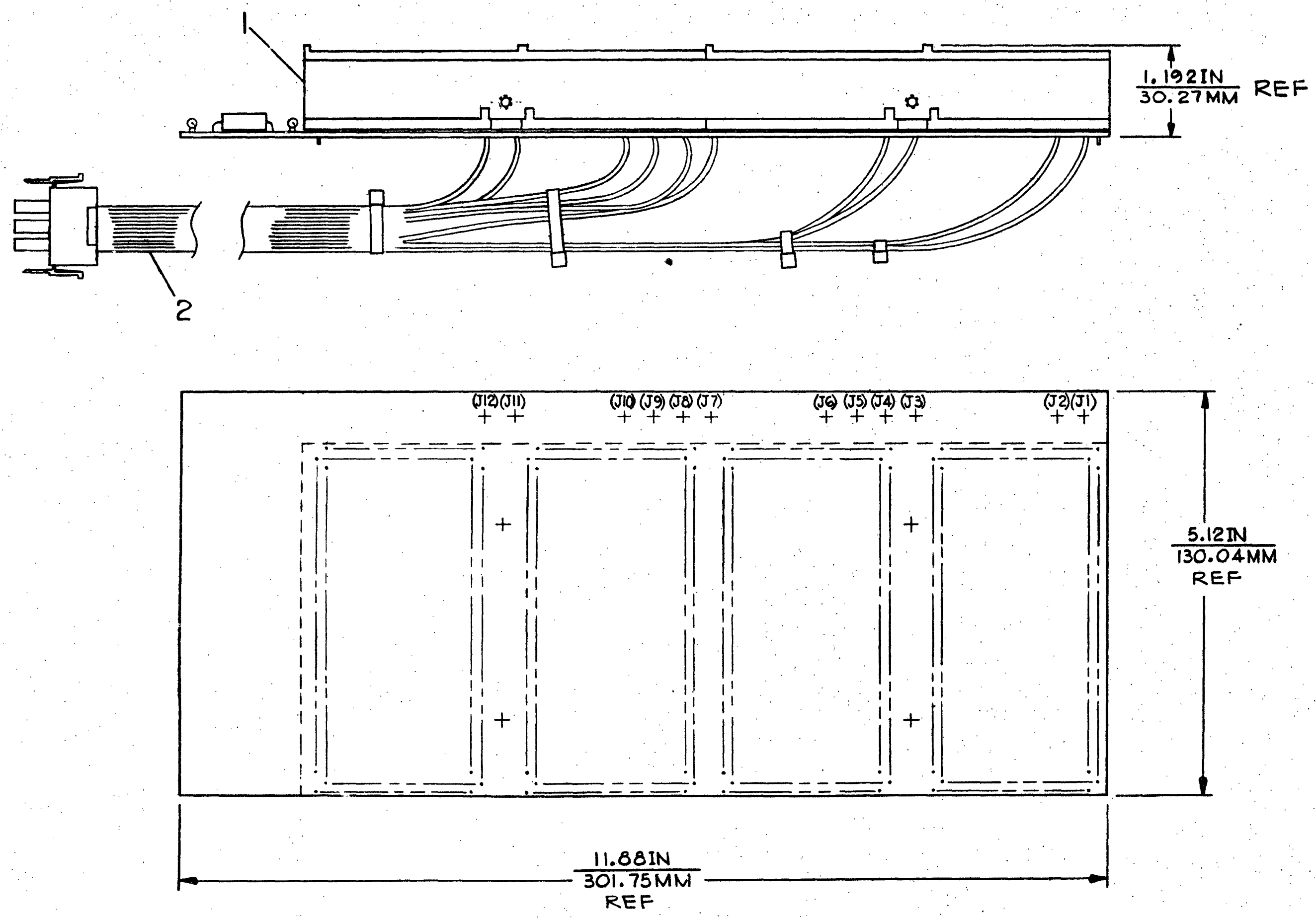

1	HARNESS, ~~POWER SUPPLY~~	D-IA-7015542-0-0	2
1	VT72 BACKPLANE	D-UA-7014605-0-0	1
QUANTITY & VARIATION	DESCRIPTION	DWG./PART NO.	ITEM NO.

UNLESS OTHERWISE SPECIFIED DIMENSIONS ARE IN INCHES

~~ANGLES ±0° 30'~~
SURFACE QUALITY IN ✓ ~~MICROINCHES~~

~~CLASS OF ACCURACY (CHECK ONE)~~	~~OVER 0 TO 0.2~~	~~OVER 0.2 TO 1.2~~	~~OVER 1.2 TO 4.0~~	~~OVER 4.0 TO 12.0~~	~~OVER 12.0 TO 40.0~~	~~OVER 40.0 TO 80.0~~
~~MEDIUM~~ ☐	±.004	±.008	~~±.012~~	±.016	±.024	±.04
PREFERRED ☐	±.012	±.016	±.025	±.04	~~±.063~~	~~±0.1~~

THIRD ANGLE PROJECTION

REMOVE BURRS AND BREAK SHARP CORNERS

DO NOT SCALE DWG

MATERIAL SEE PARTS LIST

FINISH —/—/—

DRN. 15SEP77
CHK'D 7OCT77
ENG. 8MAR78
PROJ. ENG 8MAR78
PROD 8MAR78
NEXT HIGHER ASSY. E-UA-VT72-0-0
SCALE NONE
SHEET 1 OF 1

FIRST USED ON VT 72

digital

TITLE VT72 BACKPLANE ASSY

SIZE	CODE	NUMBER	REV.
D	AD	7014609-0-0	

DIST.

REVISIONS | CHANGE NO. | REV. | CHK.

D AD7014609-0-0

D AD7014609-0-0

COMPONENT SIDE VIEW

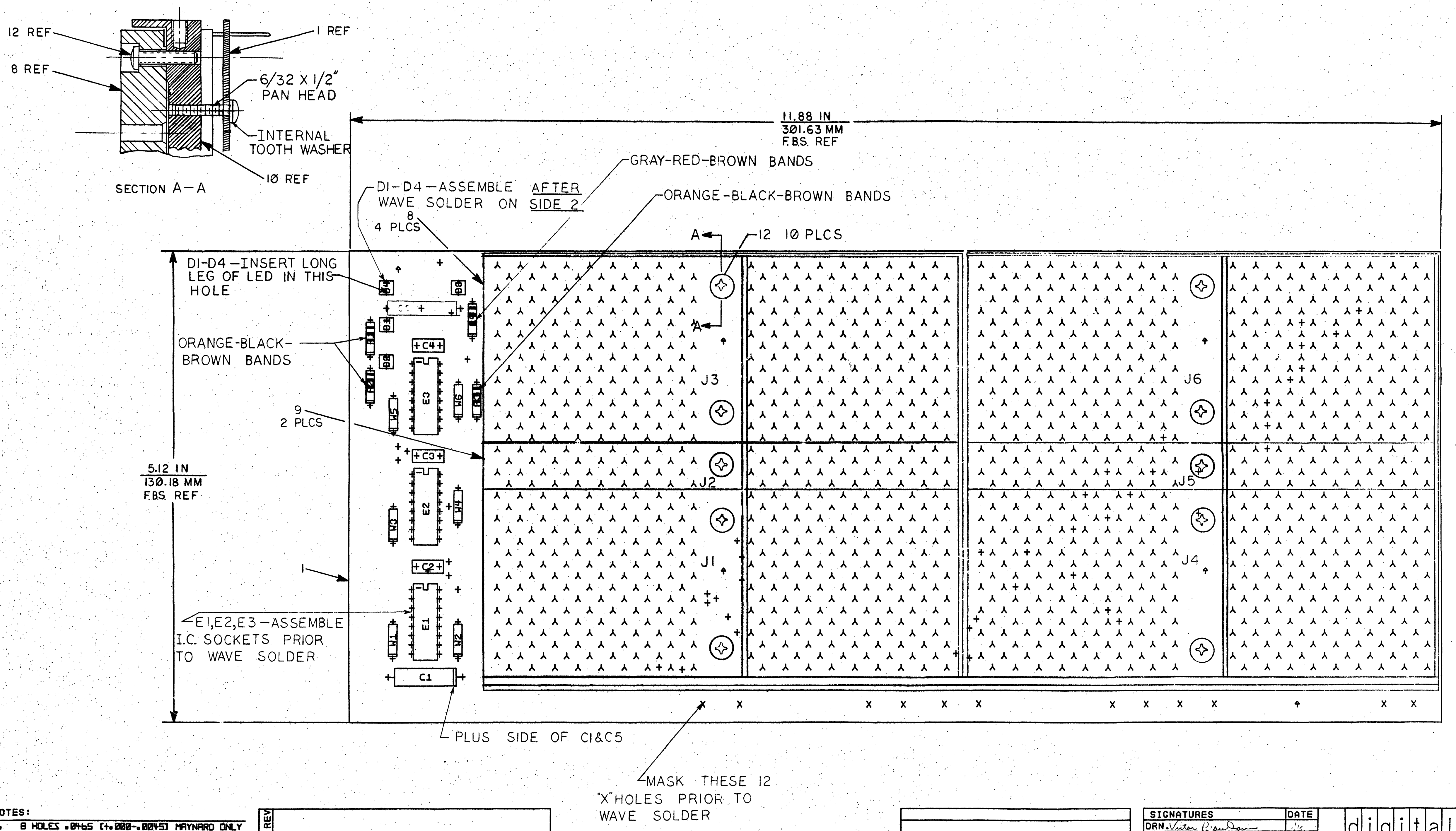
12 REF
8 REF
1 REF
6/32 X 1/2" PAN HEAD
INTERNAL TOOTH WASHER
10 REF
SECTION A—A
11.88 IN
301.63 MM
F.B.S. REF
GRAY-RED-BROWN BANDS
D1-D4—ASSEMBLE AFTER WAVE SOLDER ON SIDE 2
ORANGE-BLACK-BROWN BANDS
8
4 PLCS
A
12 10 PLCS
D1-D4—INSERT LONG LEG OF LED IN THIS HOLE
ORANGE-BLACK-BROWN BANDS
C4
C3
C2
C1
E1
E2
E3
W1
W2
W3
W4
W5
W6
J1
J2
J3
J4
J5
J6
9
2 PLCS
5.12 IN
130.18 MM
F.B.S. REF
1
E1,E2,E3—ASSEMBLE I.C. SOCKETS PRIOR TO WAVE SOLDER
PLUS SIDE OF C1&C5
MASK THESE 12 "X" HOLES PRIOR TO WAVE SOLDER

NOTES:
1. 8 HOLES .0465 [+.000-.0045] MAYNARD ONLY

CHK	CHANGE NO	REV

ETCH REV. D
P.C. DESIGN DATA BASE REV. D

SIGNATURES	DATE
DRN. Victor	
CHK'D.	
ENG.	1/3/77
PROJ. ENG.	1/3/77
PROD.	
SCALE 2/1	
SHT. 1 OF 1	
NEXT HIGHER ASSY. NONE	

digital

TITLE
VT 72 BACKPLANE

SIZE	CODE	NUMBER	REV
D	UA	7014605-0-0	C

D UA 7014605-0-0 C

1 MS# 104057

110

WIRE TABLE

ITEM	DESCRIPTION		FROM		TO	
NO.	AWG	COLOR	CONN	WITH	CONN	WITH
	22	BLK	P1-1	—	P2-2	3&4
	↑	BLK			P2-3	↑
11		WHT	P1-6	—	P2-4	
	↓	RED	P1-8	—	P2-1	↓
	22	GRN	P1-9	—	P2-6	3&4

NOTES:

1. DRAIN WIRE AND SHIELD TO BE CUT BACK TO OUTER CABLE JACKET.
2. ~~EMPTY PINS TO BE INSERTED FOR EXTRA GRIPPING POWER.~~

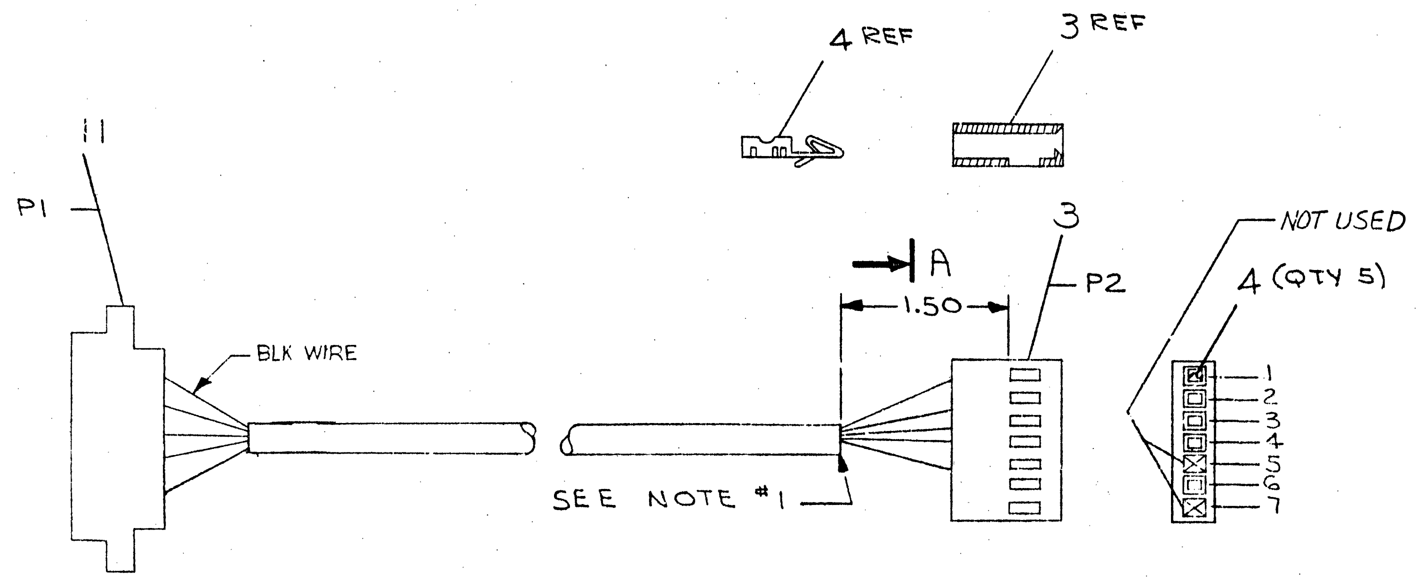

VIEW A-A
WITH ITEM #11
(CABLE) REMOVED

1	VIDEO CABLE	C-IA-7016416-02	11
~~1~~	~~VIDEO CABLE~~	~~3012537-04~~	10
~~1~~	~~CABLE TIE~~	~~9007031~~	~~9~~
~~1~~	~~LABLE, MFG.~~	~~9009532-00~~	~~8~~
~~1~~	~~MOD. FORK KEY, PLUG~~	~~1213909-00~~	~~7~~
~~A/R~~	~~CABLE, 6 COND. 22 AWG.~~	~~9107723~~	~~6~~
~~1~~	~~STICKER, "THIS SIDE UP"~~	~~3611567~~	~~5~~
5	TERMINAL, CRIMP	1212103-00	4
1	HSG. CRIMP CONN. (7 CIR.)	1212105-00	3
~~4~~	~~MOD. FORK CONTACT~~	~~1213806-00~~	~~2~~
~~1~~	~~HSG. MOD. FORK, 10 POS.~~	~~1213803-00~~	~~1~~
QUANTITY & VARIATION	DESCRIPTION	DWG./PART NO.	ITEM NO.

UNLESS OTHERWISE SPECIFIED DIMENSIONS ARE IN INCHES

ANGLES ±0° 30'	CLASS OF ACCURACY (CHECK ONE)	NOMINAL DIMENSION RANGE INCHES					
SURFACE QUALITY IN MICROINCHES ✓		OVER 0 TO 0.2	OVER 0.2 TO 1.2	OVER 1.2 TO 4.0	OVER 4.0 TO 12.0	OVER 12.0 TO 40.0	OVER 40.0 TO 80.0
	MEDIUM ☐	±.004	±.008	±.012	±.016	±.024	±.04
	PREFERRED ☐	±.012	±.016	±.025	±.04	±.063	±0.1

THIRD ANGLE PROJECTION

REMOVE BURRS AND BREAK SHARP CORNERS

DO NOT SCALE DWG

DRN. K Davis	4-8-76	FIRST USED ON VT71
CHK'D [illegible]	24 May 76	
ENG R Camelio	24/May 76	TITLE CABLE, VIDEO ASSY.
PROJ. ENG R Camelio	24/May 76	
PROD [illegible]	24 May 76	
NEXT HIGHER ASSY. E-UA-VT71-0-0		

MATERIAL
SEE PARTS LIST

FINISH —/—/—

SCALE NONE

SHEET 1 OF 1

SIZE	CODE	NUMBER	REV.
C	IA	7012576-0-0	D

DIST.

digital

REVISIONS

CHK	CHANGE NO.			REV.
J.C	VT71-00004	N Home 14-SEP-76 R. CAMELIO	R Camelio 29 Sep '76	A
KIT	7012576-00001	B Chiasson 10 FEB 77 S. GROSS	11 Feb 77	B
JA	VT71-00021	STEVE KILLCZMAK 78 M. ROOSA	M Roosa 7 Mar 78	C
	7012576-MK002	H. [illegible] 05-FEB-79 D. O'CONNELL	D O'Connell 2/28/79	D

MAKEPEACE P-1393

DEC FORM NO. DRO 100-C

MK

This document contains confidential proprietary information of DEC. This information shall not be disclosed to persons outside the employ of DEC, except by DEC personnel so authorized by DEC, and only for use by such other persons in the design, production or manufacture of products for DEC. Copyright © Digital Equipment Corporation.

DIGITAL EQUIPMENT CORPORATION
MAYNARD, MASSACHUSETTS

ENGINEERING SPECIFICATION DATE 4/4/78

TITLE VT72/t ACCEPTANCE PROCEDURE - FA & T

REVISIONS

REV	DESCRIPTION	CHG NO	ORIG	DATE	APPD BY	DATE

ENG	APPD	SIZE	CODE	NUMBER	REV
		A	SP	VT72-0-5	

ENGINEERING SPECIFICATION digital CONTINUATION SHEET

TITLE VT72/t ACCEPTANCE PROCEDURE - FA & T

1.0 Scope

This procedure details the procedure to accept a VT72/t at the system integration or option order area. This procedure details the required procedures to system test a VT72/t on the following system types:

1. PDP-11 with DH11 interface.
2. PDP-11 with DL11 interface.
3. PDP-8 with KL8-J interface.
4. PDP-8 with DH8-E interface.

This procedure is set up in the following manner:

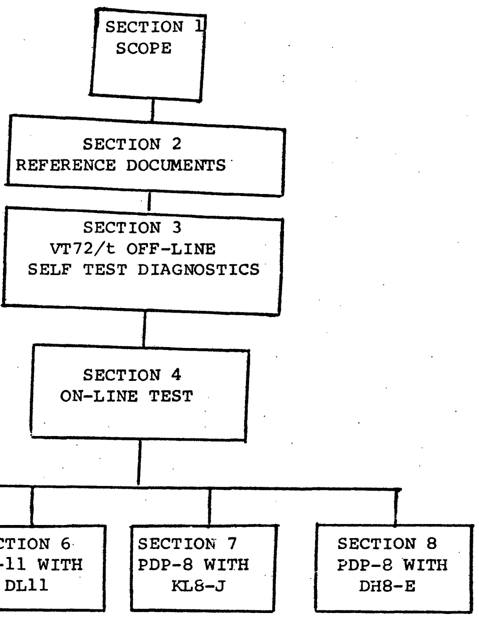

SIZE	CODE	NUMBER	REV
A	SP	VT72-0-5	

ENGINEERING SPECIFICATION digital CONTINUATION SHEET

TITLE VT72/t ACCEPTANCE PROCEDURE - FA & T

2.0 Reference Documents

2.1 VT72/t Service Manual; (EK-VT72t-SV).

2.2 VT72/t Print Set.

2.3 Mast Phase 1 Check Off List.

2.4 Workmanship Manual; (DEC STD 116).

2.5 Finish and Color Standard; (DEC STD 092).

3.0 VT72/t OFF-LINE SELF TEST DIAGNOSTICS

3.1 Checkout Inspection

Following receipt of the test item(s), perform a brief (quick scan) visual inspection for obvious discrepancies per the DEC STD 116 and DEC STD 092.

3.2 Off-Line Checkout

Run terminal off-line self test step 1, step 2, step 3 and step 4 as defined in chapter 2.4 of the VT72/t Text Editing Terminal Service Manual.

4.0 On-Line Test

4.1 PDP-11 With DH11 Interface:

Go to Section Five(5) for checkout and acceptance procedure.

4.2 PDP-11 With DL11 Interface:

Go to Section Six(6) for checkout and acceptance procedure.

4.3 PDP-8 With KL8-J Interface:

Go to Section Seven(7) for checkout and acceptance procedure.

4.4 PDP-8 With KL8-A Interface:

Go to Section Eight(8) for checkout and acceptance procedure.

SIZE	CODE	NUMBER	REV
A	SP	VT72-0-5	

ENGINEERING SPECIFICATION digital CONTINUATION SHEET

TITLE VT72/t ACCEPTANCE PROCEDURE - FA & T

5.0 PDP-11 With DH11 Checkout And Acceptance Procedure

5.1 Required Test Equipment

5.1.1 PDP-11 System With DH11

5.1.2 H319 And BC03S Cable

5.1.3 MRV11-VC = (M7942-YC)

5.2 Required Test Software

5.2.1 MAINDEC-11-DZDHJ, DH11 Echo Cable Test.

5.3 On-Line Test Set-Up

Set-up the test item(s), with all power off, in the configuration shown in Figure 1 and insert MRV11-VC into the VT72/t as per service manual, (Appendix A).

5.4 On-Line Checkout And Acceptance

If an MRV11-VC is available for each VT72/t to be on-line, system tested do step 5.4.1 (Do not perform step 5.4.2).

If an MRV11-VC is not available for each VT72/t to be tested do step 5.4.2. (Do not perform step 5.4.1).

5.4.1 Run ESC, D DLV11 Host Loopback. (See VT72/t Service Manual Section 3.2.3 for details).

5.4.2 Using the steps outlined below, "hand toggle" the following program into the VT72. (On the VT72 keyboard, "NEW PARA" is equivalent to line feed).

Loc	Instruction	Type
200	5	(LF)
(Cmd. to open	105737	(LF)
Mem. Loc 200)	177650	(LF)
	100375	(LF)
	113737	(LF)
	177652	(LF)
	771	(CR)

SIZE	CODE	NUMBER	REV
A	SP	VT72-0-5	

5.4.3 Load the DH11 Echo Cable Test (MAIN-DEC-11-DZDHJ). Then patch the line parameters register constant to enable even parity.

LOC	BEFORE	AFTER
4620	33503	33523

Then start the test in the host, (LINE SPEED MUST BE 9600 BAUD).

5.4.4 Select the cable test section of the diagnostic.

5.4.5 Allow the test to run for 15 min. on each VT72/t,

5.4.6 No errors are acceptable in the 5.4.5 15 min. per terminal test.

5.4.7 Set bootstrap function switches on the M8656 module. SW #7 of E16 to OFF and SW #8 of E16 to ON. (Further details, see VT72/t Service Manual, Appendix B, Figure B-8).

6.0 PDP-11 With DL11 Checkout And Acceptance Procedure

6.1 Required Test Equipment

6.1.1 PDP-11 System with DL11

6.1.2 H319 and BC03S Cable

6.1.3 MRV11-VC = (M7942-YC)

6.2 Required Test Software

6.2.1 MAIN-DEC-11-DZDLA, DL11 Test.

6.3 On-Line Test Set-Up

Set-up the test item(s), with all power off, in the configuration shown in Figure 2 and insert MRV11-VC into the VT72/t as per service manual, (Appendix A).

6.4 On-Line Checkout And Acceptance

6.4.1 If each VT72/t to be tested has an MRV11-VC; perform section 5.4.1.

6.4.2 If each VT72/t to be tested does not have an MRV11-VC; perform section 5.4.2.

6.4.3 Load and start the DL11 Test, (MAIN-DEC-11-DZDLA). Line speed must be 9600 baud.

6.4.4 Select test #56 of the DL11 diagnostic.

6.4.5 Allow the test to run for 15 min. on each VT72/t.

6.4.6 No errors are acceptable in the 6.4.5 15 min. per terminal test.

6.4.7 Set bootstrap function switches on the M8656 module. SW #7 of E16 to OFF and SW #8 of E16 to ON. (Further details, see VT72/t Service Manual, Appendix B, Figure B-8).

7.0 PDP-8 With KL8-J Checkout And Acceptance Procedure

7.1 Required Test Equipment

7.1.1 PDP-8 System with KL8-J

7.1.2 H319 and BC03S Cable

7.1.3 MRV11-VC = (M7942-YC).

7.2 Required Test Software

7.2.1 MAIN-DEC-8-DIKLA, KL8-J Loopback Test.

7.3 On-Line Test Set-Up

Set-up the test item(s), with all power off, in the configuration shown in Figure 3 and insert MRV11-VC into the VT72/t as per service manual, (Appendix-A).

7.4 On-Line Checkout And Acceptance

7.4.1 If each VT72/t to be tested has an MRV11-VC, perform section 5.4.1.

7.4.2 If each VT72/t to be tested does not have an MRV11-VC, perform section 5.4.2.

7.4.3 Load and start the KL8-J Loopback Test, (MAIN-DEC-8-DIKLA).

7.4.4 Allow the test to run for 15 min. on each VT72/t.

7.4.5 No errors are acceptable in the 7.4.4 15 min. per terminal test.

7.4.6 Set bootstrap function switches on the M8656 module. SW #7 of E16 to OFF and SW #8 of E16 to ON. (Further details, see VT72/t Service Manual, Appendix B, Figure B-8).

8.0 PDP-8 With DH8-E Checkout And Acceptance Procedure

8.1 Required Test Equipment

8.1.1 PDP-8 System with DH8-E.

8.1.2 H319 and BC03S Cable.

8.1.3 MRV11-VC = (M7942-YC).

8.2 Required Test Software

8.2.1 MAIN-DEC-8-DJKLA, KL8-A Loopback Test.

8.3 On-Line Test Set-Up

Set-up the test item(s), with all power off in the configuration shown in Figure 4 and insert MRV11-VC into the VT72/t as per service manual, (Appendix-A).

8.4 On-Line Checkout And Acceptance

8.4.1 If each VT72/t to be tested has an MRV11-VC, perform section 5.4.1

8.4.2 If each VT72/t to be tested does not have an MRV11-VC, perform section 5.4.2.

8.4.3 Load and start the KL8-A Loopback Test, (MAIN-DEC-8-DJKLA).

8.4.4 Allow the test to run for 15 min. on each VT72/t.

8.4.5 No errors are acceptable in the 8.4.4 15 min. per terminal test.

8.4.6 Set bootstrap function switches on the M8656 module. SW #7 of E16 to OFF and SW #8 of E16 to ON. (Further details, see VT72/t service manual, Appendix B, Figure B-8).

ENGINEERING SPECIFICATION **CONTINUATION SHEET**

TITLE VT72/t ACCEPTANCE PROCEDURE - FA & T

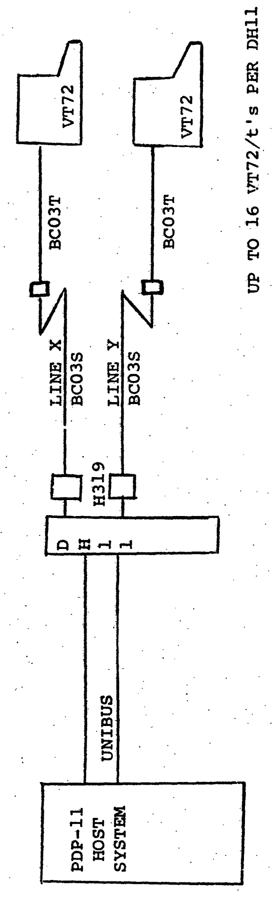
VT72
VT72
BC03T
BC03T
LINE X
BC03S
LINE Y
BC03S
H319
DH11
UNIBUS
PDP-11
HOST
SYSTEM
UP TO 16 VT72/t's PER DH11

VT72 CABLING

FIGURE 1

SIZE	CODE	NUMBER	REV
A	SP	VT72-0-5	

SHEET 9 OF 12

DEC FORM NO EN-01022-16-N370-(381)
DRA 108

ENGINEERING SPECIFICATION **CONTINUATION SHEET**

TITLE VT72/t ACCEPTANCE PROCEDURE - FA & T

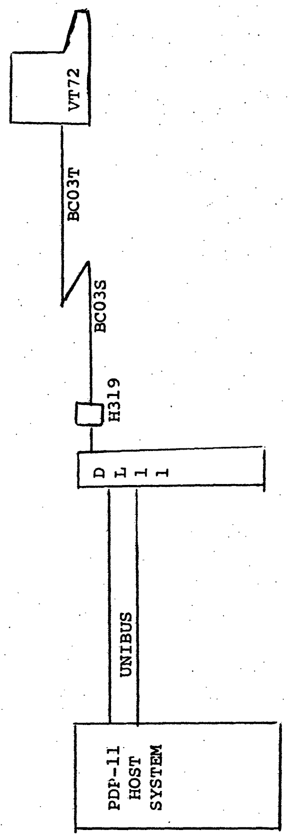
VT72
BC03T
BC03S
H319
DL11
UNIBUS
PDP-11
HOST
SYSTEM

VT72 CABLING

FIGURE 2

SIZE	CODE	NUMBER	REV
A	SP	VT72-0-5	

SHEET 10 OF 12

DEC FORM NO EN-01022-16-N370-(381)
DRA 108

ENGINEERING SPECIFICATION **CONTINUATION SHEET**

TITLE VT72/t ACCEPTANCE PROCEDURE - FA & T

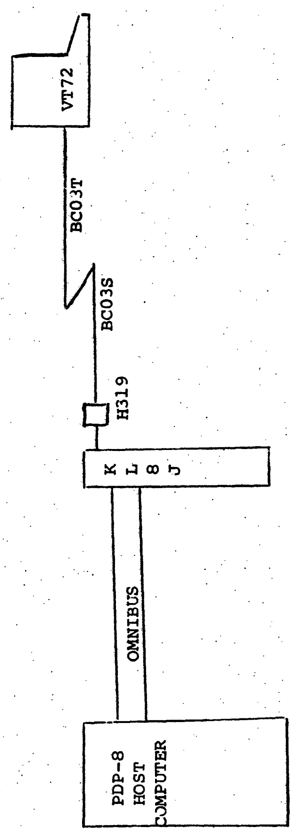
VT72
BC03T
BC03S
H319
KL8J
OMNIBUS
PDP-8
HOST
COMPUTER

VT72 CABLING

FIGURE 3

SIZE	CODE	NUMBER	REV
A	SP	VT72-0-5	

SHEET 11 OF 12

DEC FORM NO EN-01022-16-N370-(381)
DRA 108

ENGINEERING SPECIFICATION **CONTINUATION SHEET**

TITLE VT72/t ACCEPTANCE PROCEDURE - FA & T

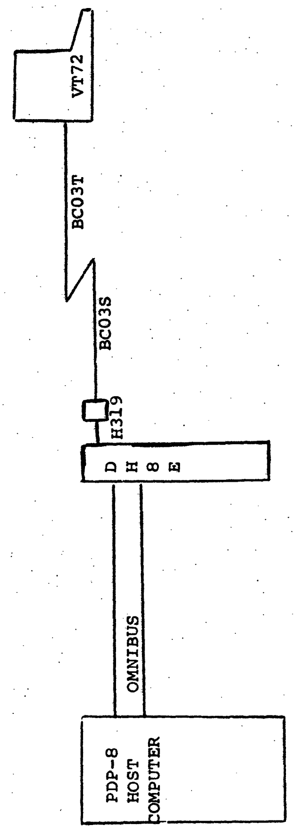
VT72
BC03T
BC03S
H319
DH8E
OMNIBUS
PDP-8
HOST
COMPUTER

VT72 CABLING

FIGURE 4

SIZE	CODE	NUMBER	REV
A	SP	VT72-0-5	

SHEET 12 OF 12

DEC FORM NO EN-01022-16-N370-(381)
DRA 108