This drawing and specifications, herein, are the property of Digital Equipment Corporation and shall not be reproduced or copied or used in whole or in part as the basis for the manufacture or sale of items without written permission.

DIGITAL EQUIPMENT CORPORATION
MAYNARD, MASSACHUSETTS

ENGINEERING SPECIFICATION DATE 11/19/74

TITLE FIELD INSTALLATION & ACCEPTANCE PROCEDURE FOR KM8-A

REVISIONS

REV	DESCRIPTION	CHG NO	ORIG	DATE	APPD BY	DATE

ENG	APPD	SIZE	CODE	NUMBER	REV
12/4/74		A	SP	KM8-A-1	

ENGINEERING SPECIFICATION CONTINUATION SHEET

TITLE FIELD INSTALLATION & ACCEPTANCE PROCEDURE FOR KM8-A

I GENERAL

This procedure defines the performance standards required of the KM8A*, option board #2. This procedure refers to both system and add-on acceptance.

NOTE: If KM8A was shipped as part of a PDP-8A system, then proceed to installation procedure.

* Memory Extension & Time Share
Bootstrap Loaders
Power Fail/Auto Restart

II INSPECTION

After removing the KM8A from the packing material, inspect the module for the following:

1. Inventory hardware against shipping list.
2. Inventory software against software list, if ordered.
3. Inventory prints against shipping list, if ordered.
4. Check module for loose or broken components.

III INSTALLATION PROCEDURE

Install the equipment using the following procedure:

1. Set the switches as indicated by the diagnostic write up.

NOTE: Refer to Operator's Handbook for switch setting descriptions.

2. Insure that the PDP-8A power is removed from the Omnibus™.

3. Insert the KM8A into the second or third slot of the Omnibus™.

4. Turn the power back "ON".

IV ACCEPTANCE PROCEDURE

Perform the acceptance procedure defined in Table A. If abnormal indications are encountered, refer to the diagnostic listing for the type of error. Reference the diagnostic write ups and Operator's Manual for instructions for loading diagnostics.

SIZE	CODE	NUMBER	REV
A	SP	KM8-A-1	

ENGINEERING SPECIFICATION CONTINUATION SHEET

TITLE FIELD INSTALLATION & ACCEPTANCE PROCEDURE FOR KM8-A

IV ACCEPTANCE PROCEDURE (continued)

Equipment required:

1. PDP-8A with 1K min. R/W Memory
2. Paper Tape Input Device
3. Diagnostic and Listings
4. Programmer's Console (KC8-A & DKC8-A)
5. W987 Quad Extender

NOTE: If the programmer's console and paper tape input device are not available as part of the system being used, they must be supplied in good working order by the customer.

TABLE A

Acceptance of KM8A with 4K of R/W Memory

Program Name	Maindec #	Accept Time	Restrictions
KM8A Option Test #2	08-DJKMA-PB	30 min	4K R/W Memory Min

Acceptance of KM8A with Less than 4K R/W Memory

KM8A Option Test #2 Segment #1 (RIM)	08-DJKMA -PM1	10 min	1K R/W memory min
KM8A Option Test #2 Segment #2 (RIM)	08-DJKMA -PM2	10 min	1K R/W Memory Min
KM8A Option Test #2 Segment #4 (RIM)	08-DJKMA -PM4	10 min	1K R/W Memory Min

SIZE	CODE	NUMBER	REV
A	SP	KM8-A-1	

THIS DRAWING AND SPECIFICATIONS HEREIN, ARE THE PROPERTY OF DIGITAL EQUIPMENT CORPORATION AND SHALL NOT BE REPRODUCED OR COPIED OR USED IN WHOLE OR IN PART AS THE BASIS FOR THE MANUFACTURE OR SALE OF ITEMS WITHOUT WRITTEN PERMISSION
COPYRIGHT © 1977 DIGITAL EQUIPMENT CORPORATION

NOTES:

ECO 4-4-1. THIN WALL TUBING TO BE USED ON CAPACITOR LEAD GOING TO DV2.

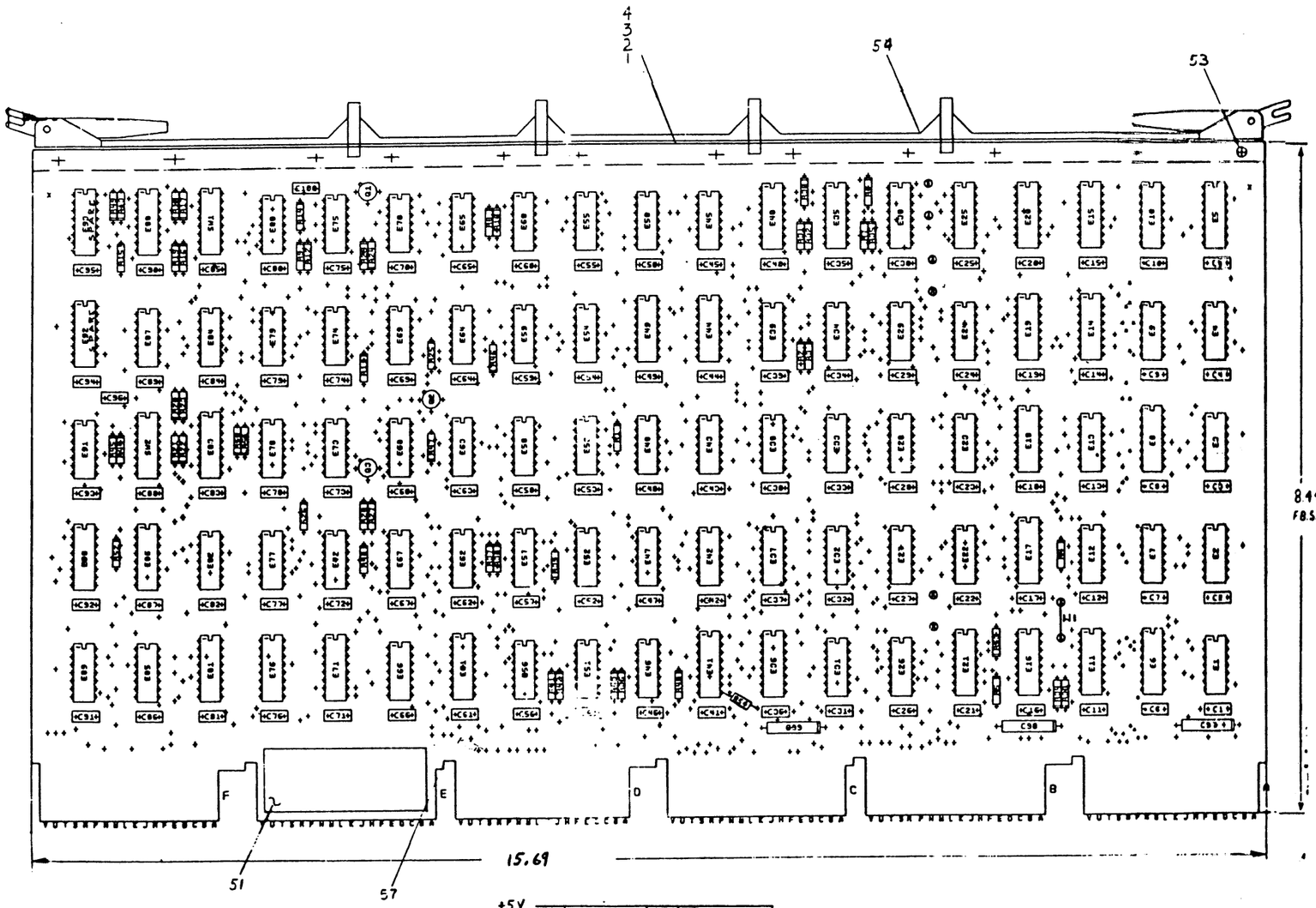

IC 7442	8	16
IC 314	1	8
IC 8234	8	16
IC 74173	8	16
IC 74153	8	16
IC 74S257	8	16
IC 8837	8	16
IC 7473	11	4
IC 8266	8	16
IC 74175	8	16
IC TYPE	GND	+5V

GND AND 5V ARE USUALLY PIN 7 AND 14 RESPECTIVELY EXCEPTIONS ARE STATED ABOVE

IC PIN LOCATIONS

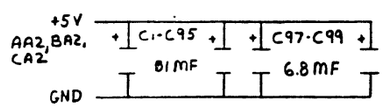

AC1, AC2, AF1, AF2, AN1, AN2, AT1, AT2
BC1, BC2, BF1, BF2, BN1, BN2, BT1, BT2
CC1, CC2, CF1, CF2, CN1, CN2, CT1, CT2
DC1, DC2, DF1, DF2, DN1, DN2, DT1, DT2

REF	REF				
REF	REF		X-Y COORDINATE HOLE LOCATION	K-CO-M8317-YB-4	1
REF	REF		ASSY/DRILLING HOLE LAYOUT	D-AH-M8317-YB-5	2
REF	REF		MODULE ECO HISTORY (INACTIVE)	B-MH-M8317-YB-6	3
1	1		ETCHED CIRCUIT BOARD	5010938	4
1	1	C96	CAP 5000 PF 100 V DISC	1001765	5
96	96	C1-C95, C100	CAP .01 MF 100 V 20%	1001610-01	6
3	3	C97-C99	CAP 6.8 MF 35V 10%	1005306	7
2	2	SW1, SW2	DIP SWITCH	1211164-04	8
47	47	R1-R24, R26, R28-R43 R49-R53, R46,	RES. 1K 1/4 5%	1300365	9
1	1	R44	RES. 100 OHM 1/4W 5%	1300229	10
4	4	R25, R27, R47, R48	RES. 27 OHM 1/4 W 5%	1301522	11
3	3	Q1, Q2, Q3	TRANSISTOR DEC 3009B	1503100	12
6	6	E80, 63, 65, 87, 79, 84	I.C. 7474	1905547	13
6	6	E23, 45, 37, 70, 69, 91	I.C. 7400	1905575	14
1	1	E31	I.C. 7410	1905576	15
2	2	E39, 50	I.C. 7420	1905577	16
1	1	E7	I.C. 7430	1905578	17
1	1	E82	I.C. 7473	1905587	18
3	3	E38, 60, 62	I.C. 7402	1909004	19
6	6	E12, 26, 33, 34, 53, 77	I.C. 74S11	1910537	20
2	2	E19, 20	I.C. 74S257	1911641	21
1	1	E13	I C 74S74	1910544	22
6	6	E58, 47, 56, 51, 46, 57	I.C. 8881	1909705	23
2	2	E52, 48	I.C. 7417	1909929	24
2	2	E86, 90	I.C. 8266	1909934	25
1	1	E30	I.C. 74153	1909937	26
1	1	E28	I.C. 74S00	1910532	27
2	2	E85, 89	I.C. 74197	1910035	28
1	1	E78	I.C. 74164	1910041	29
2	2	E17, 40	I.C. 7442	1910046	30
3	3	E64, 67, 74	I.C. 7437	1910091	31
4	4	E24, 55, 75, 72	I C 7408	1910155	32
1	1	E22	I.C. 314	1909704	33
2	2	E61, 71	I.C. 74175	1910651	34
1	1	E9	I.C. 8093	1910837	35
2	2	E29, 73	I.C. 7427	1910878	36
2	2	E8, 14	I.C. 8234	1911315	37
6	6	E5, 10, 15, 25, 44, 49	I.C. 74173	1911330	38
6	6	E32, 43, 54, 59, 66, 68	I.C. 7404	1909686	39
–	1	E76,	I.C. MIKP ROM#1 (256X4)	23465A2	40
–	1	E81	I.C. MIKP ROM#2 (256X4)	23469A2	41
1	1	E35	I.C. MIKP ROM#3 (32X8)	23-084A1	42
1	1	E16	I.C. KMTS ROM# 1(256X4)	23-086A2	43
4	4	E1, 2, 3, 4	I.C. 7412	1909955	44
6	6	E6, 11, 18, 21, 36, 41	I.C. 8837	1911116	45
1	1	E42	I.C. 74S04	1910534	46
1	1	E27	I.C. 74S10	1910536	47
4	4	E76, 81, 83, 88	SOCKET, 16 PIN	1211813	48
1	1	R45	RES. 220 1/4 W 5%	1300271	49
8	8		SPLIT LUG	9006735	50
.05	.05		DECAL	7415856	51
	QTY	REF. DESIGNATION	DESCRIPTION	PART NO.	ITEM NO.

PARTS LIST

FIRST USED ON OPTION MODEL
OPTION MODULE KMBA

ETCH BOARD REV. E

DEC NO.	EIA NO.	DEC NO.	EIA NO.
		M8317-YC	M8317-YB

SEMICONDUCTOR CONVERSION CHART

REV.	CHANGE NO.	CHK.	REVISIONS
M	M8317-00008	CL	REVISED & REDRAWN
N	M8317-YB-00001		
P	M8317-YB-ML002		
R	M8317YB-3		
S			

DRN. D.D.D.	DATE 11-2-77	digital
CHK'D	DATE 12-27-77	
ENG.	DATE 5-Jan-78	TITLE OPTION BOARD # 2
PROJ. ENG.	DATE 5-Jan-78	
PROD.	DATE 5-Jan-78	
NEXT HIGHER ASSY B-DD-M8317-YB		SIZE D CODE CS NUMBER M8317-YB-1 REV.
SCALE NONE		
SHEET 1 OF 7		DIST.

DEC FORM NO. DMD 1350

"THIS DRAWING AND SPECIFICATIONS, HEREIN, ARE THE PROPERTY OF DIGITAL EQUIPMENT CORPORATION AND SHALL NOT BE REPRODUCED OR COPIED OR USED IN WHOLE OR IN PART AS THE BASIS FOR THE MANUFACTURE OR SALE OF ITEMS WITHOUT WRITTEN PERMISSION. COPYRIGHT © 1977 DIGITAL EQUIPMENT CORPORATION"

BOOTSTRAP/AUTO RESTART FUNCTIONAL SWITCH SETTINGS

DESIRED FUNCTION	ACTIVATING SIGNAL	S1-4	S1-5	S1-6	S1-7	S1-8	S2-1
BOOTSTRAP ENABLED	"BOOT" SW	*	↑	OFF	OFF	ON	N/A
AUTO-RESTART DISABLED	N/A						
BOOTSTRAP ENABLED	"BOOT" SW	*		ON	ON	ON	N/A
AUTO-RESTART ENABLED	"AC LOW"						
BOOTSTRAP DISABLED	N/A	*	SPARE	ON	ON	OFF	N/A
AUTO-RESTART ENABLED	"AC LOW"						
BOOTSTRAP ENABLED	"AC LOW"	*		ON	OFF	OFF	N/A
AUTO-RESTART DISABLED	N/A						
BOOTSTRAP ENABLED	"AC LOW" OR "BOOT" SW	*		ON	OFF	ON	N/A
AUTO-RESTART DISABLED	N/A		↓				
TIME SHARE DISABLED	N/A	N/A	N/A	N/A	N/A	N/A	ON
TIME SHARE ENABLED	N/A	N/A	N/A	N/A	N/A	N/A	OFF

NOTES:

* S1-4 "OFF" - BOOTSTRAP CAN BE ACTIVATED BY "BOOT" SW EITHER IN THE "RUN" OR "RUN" STATE
S1-4 "ON" - BOOTSTRAP CAN ONLY BE ACTIVATED BY "BOOT" SW IN THE "RUN" STATE

1. "AC LOW" WILL CAUSE AUTO-RESTART OR BOOTSTRAP, DEPENDING ON SWITCH SETTINGS, TO OCCUR ONLY IN THE "RUN" OR STOPPED STATE
   S1-6,7,8 "OFF" - BOOTSTRAP & AUTO-RESTART DISABLED
2. E76 & E81 ARE NOT ON THE YC VARIATION KM8-AD. ALL OTHER PARTS REMAIN THE SAME
3. IF AUTO-RESTART IS ENABLED, THE AUTO-START FEATURE OF THE CPU (M8315) MUST BE DISABLED

BOOTSTRAP SELECT SWITCH SETTINGS FOR 158A2/159A2 ROMS

PROGRAM	S2-5	S2-6	S2-7	S2-8	S1-1	S1-2	S1-3	ROM ST ADD	MEM ADD START
HI-LO PT ROR	ON	ON	ON	OFF	ON	ON	ON	20	7734
RKBE	ON	OFF	ON	OFF	ON	OFF	ON	124	24
RXBE	ON	OFF	OFF	ON	OFF	ON	ON	150	33
RFØB/DF32D	OFF	ON	OFF	ON	OFF	ON	OFF	252	7750
TABE	OFF	ON	OFF	OFF	OFF	ON	OFF	272	4000

3. BOOTSTRAP SELECT SWITCHES ARE DEFINED AS FOLLOWS:
   (a) ROM ADDRESS RANGE: Ø-377
   (b) ON = LOGIC Ø OR LOW; OFF = LOGIC 1 OR HIGH
   (c) ORDER OF SIGNIFICANCE
   $S_2 5 = 2^7 = 200$ (MSB)
   $S_2 6 = 2^6 = 100$
   $S_2 7 = 2^5 = 40$
   $S_2 8 = 2^4 = 20$
   $S_1 1 = 2^3 = 10$
   $S_1 2 = 2^2 = 4$
   $S_1 3 = 2^1 = 2$

   THE LSB OF ADDRESS IS CONTROLLED BY THE BOOTSTRAP/AUTO-RESTART LOGIC

BOOTSTRAP SELECT SWITCH SETTINGS FOR 465A2/469A2 ROMS

PROGRAM	S2-5	S2-6	S2-7	S2-8	S1-1	S1-2	S1-3	ROM ST ADD	MEM ST ADD
HI-LO PTR	ON	ON	ON	OFF	ON	ON	ON	20	7734
RKBE	ON	OFF	ON	OFF	ON	OFF	ON	124	24
* RXBE	ON	OFF	OFF	ON	OFF	ON	ON	150	33
RLBA	OFF	ON	OFF	OFF	OFF	ON	OFF	272	1

* RXEE BOOT FOR BOTH RX01 AND RX02

FOR BOTH 158A2/159A2 & 465A2/469A2 ROMS

AUTO-RESTART SELECT SWITCH SETTINGS

RESTART ADDRESS	S2-2	S2-3	S2-4
Ø	OFF	OFF	OFF
2ØØ	OFF	ON	OFF
2ØØØ	ON	OFF	OFF
42ØØ	ON	ON	OFF

4. AUTO-RESTART SELECT SWITCHES ARE DEFINED AS FOLLOWS:
   (a) ROM ADDRESS RANGE: Ø-16
   (b) ON = LOGIC 1 OR LOW. OFF = LOGIC Ø OR HIGH
   (c) ORDER OF SIGNIFICANCE
   $S_2 2 = 2^3 = 10$
   $S_2 3 = 2^2 = 4$
   $S_2 4 = 2^1 = 2$

5. TO CONFIGURE MODULE FOR USE WITH KT8-A OPTION, INSTALL JUMPERS AS SHOWN BELOW

	W1	W2	W3	W4
NORMAL	IN	OUT	OUT	OUT
WITH KTBA	OUT	IN	IN	IN

COMPONENT SUBSTITUTION CHART

PART CALLED FOR			SUBSTITUTE PART		
QTY	PART NO.	DESCRIPTION	QTY	PART NO.	DESCRIPTION
96	1001610-01	.01 MFD DISC	96	1001610-00	.01 MFD GLASS
3	1503100	DEC 30098	3	1509338	DEC 6531
6	1911330	74173	6	1911711	8T10
1	1909704	314	1	1910391	5314
			1	1909972	6314
			1	1910389	7314
6	1909705	8881	6	1909973	97401
1	23158A2	ROM 1 (E76)	1	23465A2	ROM 1 (E76)
1	23159A2	ROM 2 (E81)	1	23469A2	ROM 2 (E81)

PARTS LIST

QTY	QTY	REF. DESIGNATION	DESCRIPTION	PART NO.	ITEM NO
A/R	A/R	SEE NOTE 5 (SH. 2 OF 7)	INSULATED, JUMPER WIRE	8009185	52
12	12		EYELET, HANDLE	3000824-01	53
1	1		HANDLE ASSY	1210711-02	54
1	1	R54	RES. 470Ω 1/4W 5%	1300316	55
1	1	C101	CAP. .022 MF 50V 10%	1011683	56
A/R	A/R		THIN WALL TUBING	9107256-11	57

REVISIONS		
CHK	CHANGE NO.	REV.

M8317-YC M8317-YB

TITLE OPTION BOARD #2 | SIZE D | CODE CS | NUMBER M8317-YB-1 | REV. 3

SCALE NONE | SHEET 2 OF 7 | DIST.

DEC FORM NO. DRD 120

"THIS DRAWING AND SPECIFICATIONS, HEREIN, ARE THE PROPERTY OF DIGITAL EQUIPMENT CORPORATION AND SHALL NOT BE REPRODUCED OR COPIED OR USED IN WHOLE OR IN PART AS THE BASIS FOR THE MANUFACTURE OR SALE OF ITEMS WITHOUT WRITTEN PERMISSION. COPYRIGHT © 1971 DIGITAL EQUIPMENT CORPORATION"

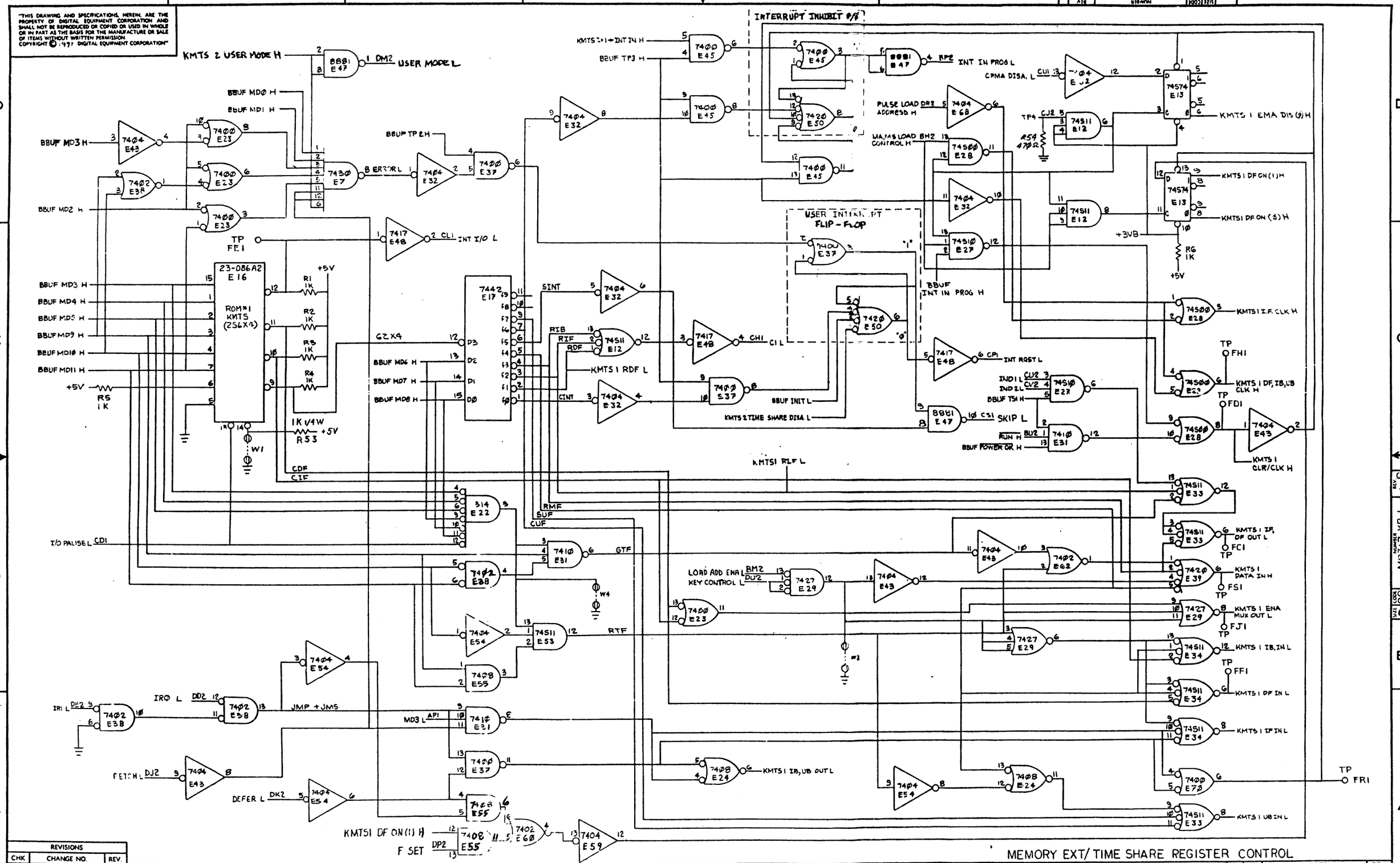

MEMORY EXT/ TIME SHARE REGISTER CONTROL

REVISIONS		
CHK	CHANGE NO.	REV.

TITLE	SIZE	CODE	NUMBER	REV.
OPTION BOARD #2 (KMTS 1)	D	CS	MB317-YB-1	S

SCALE NONE | SHEET 3 OF 7 | DIST.

"THIS DRAWING AND SPECIFICATIONS, HEREIN, ARE THE PROPERTY OF DIGITAL EQUIPMENT CORPORATION AND SHALL NOT BE REPRODUCED OR COPIED OR USED IN WHOLE OR IN PART AS THE BASIS FOR THE MANUFACTURE OR SALE OF ITEMS WITHOUT WRITTEN PERMISSION. COPYRIGHT © 1977 DIGITAL EQUIPMENT CORPORATION"

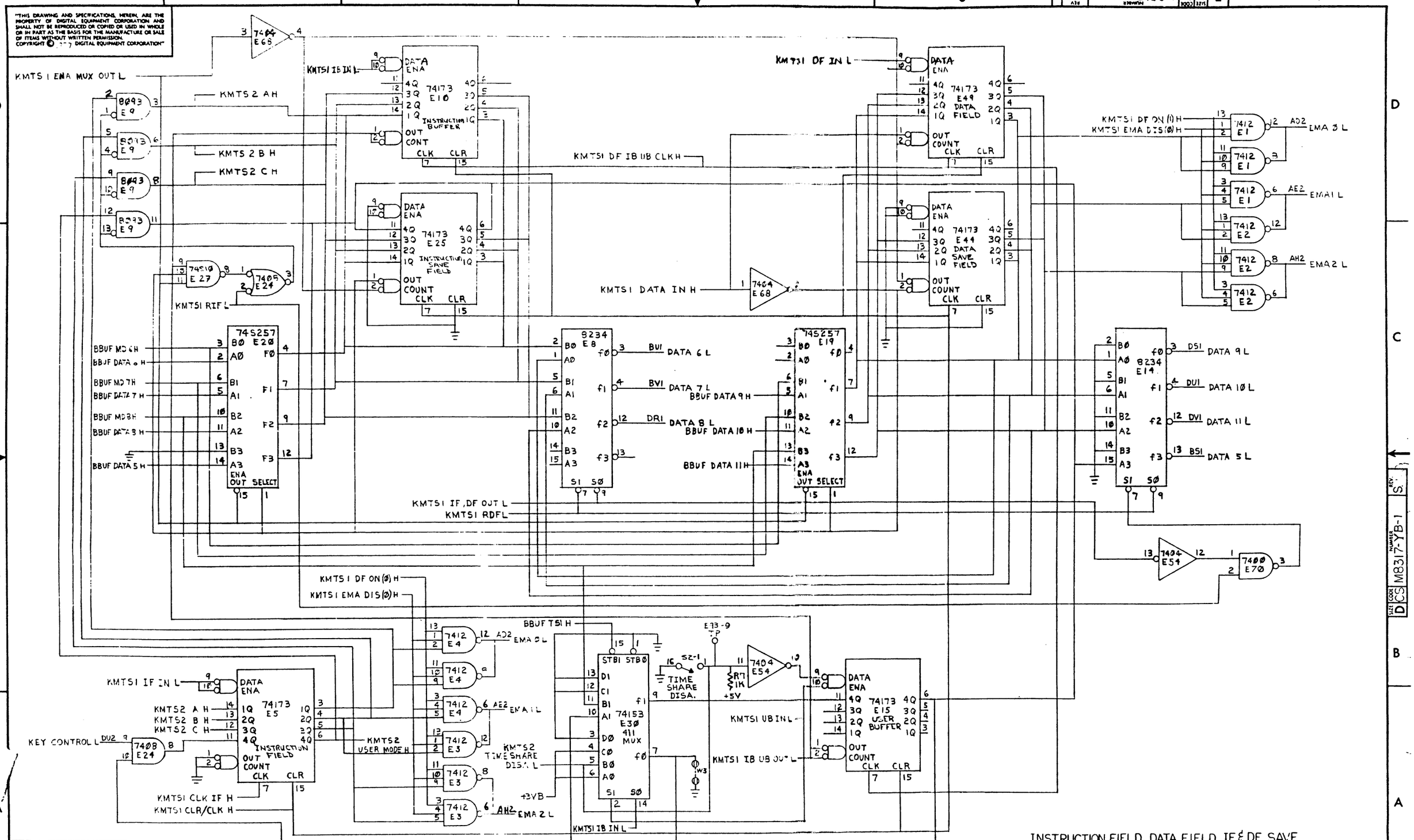

REVISIONS		
CHK	CHANGE NO.	REV.

INSTRUCTION FIELD, DATA FIELD, IF & DF SAVE FIELD, INSTRUCTION BUFFER, USER BUFFER

TITLE	SIZE	CODE	NUMBER	REV.
OPTION BOARD #2 (KMTS2)	D	CS	M8317-YB-1	S
SCALE NONE	SHEET 4 OF 7	DIST.		

DEC FORM NO. DRD 130