digital

RK05J

Engineering Drawings

Digital Equipment Corporation

The material herein is for information purposes only and is subject to change without notice. Digital Equipment Corporation assumes no responsibility for any errors which may appear herein.

These drawings and specifications herein are the property of Digital Equipment Corporation and shall not be reproduced or copied or used in whole or in part as the basis for the manufacture or sale of items without written permission.
Copyright © 1975, Digital Equipment Corporation

digital EQUIPMENT CORPORATION MAYNARD MASSACHUSETTS

DRAWING DIRECTORY

"THIS DRAWING AND SPECIFICATIONS, HEREIN, ARE THE PROPERTY OF DIGITAL EQUIPMENT CORPORATION AND SHALL NOT BE REPRODUCED OR COPIED OR USED IN WHOLE OR IN PART AS THE BASIS FOR THE MANUFACTURE OR SALE OF ITEMS WITHOUT WRITTEN PERMISSION. COPYRIGHT © , DIGITAL EQUIPMENT CORPORATION"

CUSTOMER PRINT SET INDEX

THIS IS PRINT SET [X]

SEQUENCE	
DRAWING DIRECTORY	B-DD-RKØ5J-Ø SHEET #1 ONLY
MODULE UTILIZATION LIST	C-MU-RKØ5-Ø-2
READ/WRITE	D-CS-G18Ø-Ø-1
INDEX & SECTOR	D-CS-M7680-Ø-1
CYLINDER ADDRESS & DIFFERENCE	D-CS-M7681-Ø-1
CONTROL & INTERLOCK	D-CS-M7701-Ø-1
POSITION SERVO PREAMP	D-CS-G938-Ø-1
SERVO POWER AMP CIRCUIT	D-CS-H6Ø4-Ø-1
SERVO POWER AMP	E-UA-H6Ø4-Ø-Ø
CONTROL PANEL CIRCUIT	D-CS-5409698-0-1
CONTROL PANEL	E-IA-5409698-0-0
RELAY BOARD CIRCUIT	D-CS-5409574-0-1
DECPACK MOTOR RELAYS	E-IA-5409574-0-0
CHASSIS WIRING	D-BD-RKØ5-Ø-1
ACCESSORY LIST	A-AL-RKØ5-Ø-17
POWER SUPPLY (H743)	B-DD-H743-Ø
WIRE LIST	K-WL-RKØ5-Ø-3

SEQUENCE	
MFG. PRINT SET	
MODULE UTILIZATION (PL)	A-PL-RKØ5-Ø-2
RKØ5J TESTER	B-DD-RKØ5J-T
DECPACK ASSY	D-UA-RKØ5J-0-0
DECPACK ASSY (PL)	A-PL-RKØ5J-0-0
WIRED ASSY	D-AD-7008696-0-0
LINEAR POSITIONER ASSY	D-AD-7008702-0-0
LINEAR POSITIONER ASSY (PL)	A-PL-7008702-0-0
H743 POWER SUPPLY	B-DD-H743-Ø
REVISION STATUS	A-WT-7008696-0
SPACER	B-MD-7419064-0-0

UNIT VARIATIONS

VAR	TITLE	PRINT SET RKØ5J-Ø			
RKØ5J-AA	DECPACK 115V 60HZ	X			
RKØ5J-AB	DECPACK 230V 60HZ	X			
RKØ5J-BA	DECPACK 115V 50HZ	X			
RKØ5J-BB	DECPACK 230V 50HZ	X			
RKØ5J-CA	RKØ5J-AA W.BEZEL FOR H9500	X			
[illegible]	CAB 115V 60HZ	X			
RKØ5J-CB	RKØ5J-AB W.BEZEL FOR H9500				
[illegible]	CAB 230V 60HZ	X			
RKØ5J-CC	RKØ5J-BA W.BEZEL FOR H9500				
[illegible]	CAB 115V 50HZ	X			
RKØ5J-CD	RKØ5J-BB W.BEZEL FOR H9500				
	CAB 230V 50HZ	X			
RKØ5J-DE	RKØ5J-AA H960 861 PWR CONTROL				
RKØ5J-DF	RKØ5J-AB H960 861				
RKØ5J-DH	RKØ5J-BA H960 861				
RKØ5J-DJ	RKØ5J-BB H960 861				

REVISIONS DATE	CHG. NO.	REV
A.V.	RKØ5-69	AL
DWG WAS RKØ5-0		
A.V.	RKØ5J-3	AM
[illegible]	RKØ5J-4	AN
[illegible]	RKØ5J-5	AP
[illegible]	RKØ5J-6	AR
[illegible]	RKØ5J-7	AS
[illegible]	RKØ5J-8	AT
7-77	RKØ5J-9	AU
8-77	RKØ5J-10	AV
12-77	RKØ5J-11	AW
3-78	RKØ5J-12	AY
1-79	RKØ5J-13	AZ

USED ON OPTION/MODEL	
RKØ5J	

SHEET 1 OF 5

		DATE
DRN.	J. FLEMING	1/72
CHK'D.	J. FLEMING	5/72
PROJ ENG.	A. KARLSBERG	5/72
PROD.	A. KARLSBERG	5/72
FIELD SERV.	J. WALSH	5/72

TITLE: DECPACK ASSY

SIZE	CODE	NUMBER	REV
B	DD	RKØ5J Ø	AZ

DIST

EN-01062-1A-16-R972-(3251)

DRB 106

This drawing and specifications, herein, are the property of Digital Equipment Corporation and shall not be reproduced or copied or used in whole or in part as the basis for the manufacture or sale of items without written permission.

NOTE:
TERMINATOR OR DISKBUS CABLE CONNECTOR MAY BE INTERCHANGED BETWEEN SLOTS 7 AND 8.

	1	2	3	4	5	6	7	8
	G180	M768Ø	M768I	M77ØI	G938	M983	M93Ø *	M929
USAGE	1 2	1 2	1 2	1 2	1 2	1 2	1 2	1 2
	READ/ WRITE	INDEX & SECTOR	CYLINDER ADDRESS & DIFFERENCE	CONTROL & INTERLOCK	POSITION SERVO PREAMP	CHASSIS CONNECTOR	TERMINATOR	DISKBUS CABLE CONNECTOR
USAGE								

* IF MORE THAN ONE DRIVE IS USED, M930 IS REPLACED BY M929 (BC11A), M930 IS USED IN THE LAST DRIVE ON THE BUS.

REVISIONS			
CHK.	CHANGE NO.		REV.
	RK05-00002	H. Jensen 1-12-72	A
		D. JENSEN	
	RK05-00006 & 6A	H. Jensen 2-9-72	B
		JENSEN	
	RK05-00023	2-11-72	C
		G. SCHNEIDER	
	RK05-00040	E. ALain 7-7-73	D
		G. SCHNEIDER	
	RK05J-00007	12 Jan. 77	E
		S. RADOFF	

FIRST USED ON OPTION/MODEL	QTY.	DESCRIPTION	PART NO.	ITEM NO.
RKØ5		PARTS LIST		

UNLESS OTHERWISE SPECIFIED DIMENSION IN INCHES TOLERANCES
DECIMALS .XXX = .005 .XX = .02 .X = .1
ANGLES ±0° 30'
REMOVE BURRS AND BREAK SHARP CORNERS SURFACE QUALITY ✓
MATERIAL
FINISH

DRN.		DATE 11-2-71
CHK'D		DATE 11-9-71
ENG.		DATE 24 Nov 71
PROJ. ENG.		DATE 11-24-71
PROD.		DATE 11/1/71
NEXT HIGHER ASSY.	B-DD-RKØ5-Ø	
SCALE	NONE	
SHEET	OF	

digital EQUIPMENT CORPORATION MAYNARD, MASSACHUSETTS

TITLE
MODULE UTILIZATION

SIZE	CODE	NUMBER	REV.
C	MU	RKØ5-Ø-2	E

DIST.

DEC FORM NO. DRC 100-A

"THE DRAWING AND SPECIFICATIONS, HEREIN, ARE THE PROPERTY OF DIGITAL EQUIPMENT CORPORATION AND SHALL NOT BE REPRODUCED OR COPIED OR USED IN WHOLE OR IN PART AS THE BASIS FOR THE MANUFACTURE OR SALE OF ITEMS WITHOUT WRITTEN PERMISSION. COPYRIGHT © 1974 DIGITAL EQUIPMENT CORPORATION"

NOTES:

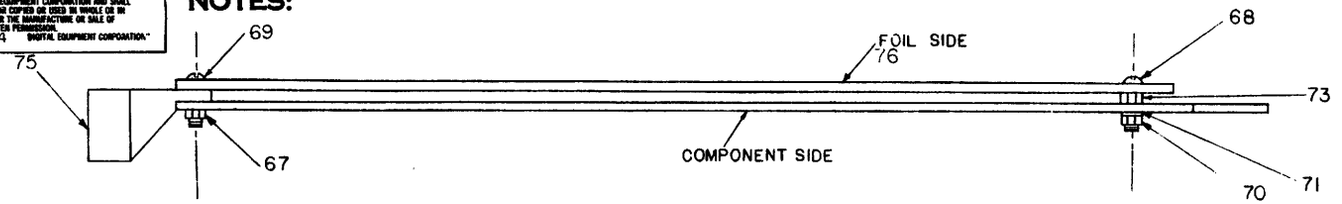

NOTE:
DO NOT INSERT → HANDLE HOLE EYELETS ON OUTSIDE HANDLE HOLES: (2 PLCS)

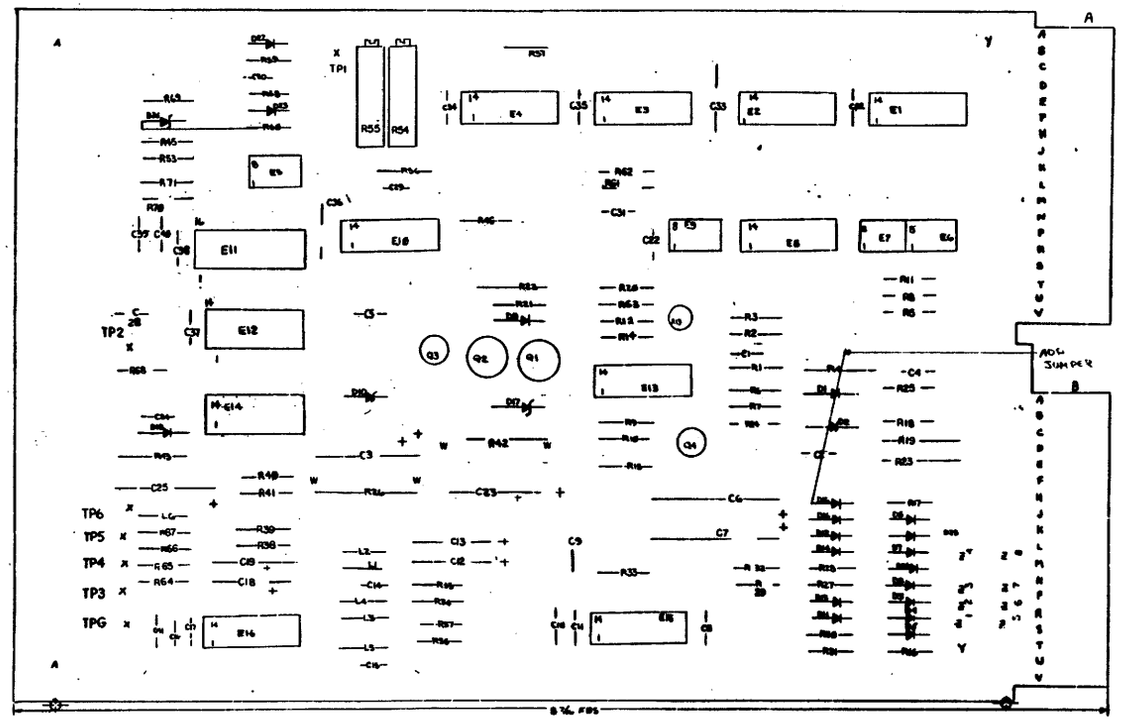

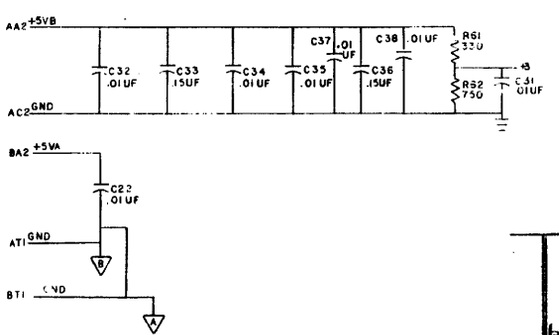

DEC 8640		6		
DEC 7452	4	8		
IC TYPE	GND	+5V		

GND AND 5V ARE USUALLY PIN 7 AND 14 RESPECTIVELY EXCEPTIONS ARE STATED ABOVE

IC PIN LOCATIONS

QTY	REF. DESIGNATION	DESCRIPTION	PART NO.	ITEM NO.
3	E6,E7,E9	I.C. DEC 75452	1910645	65
2	E15,16	I.C. DEC 733	1910644	65
1	E14	I.C. DEC 1414	1[illegible]037	64
1	E5	I.C. DEC 741	1[illegible]298	63
1	E1	I.C. DEC 8881	1909705	62
2	E2,E8	I.C. DEC 8640	1[illegible]469	61
1	E10	I.C. DEC 9601	1909373	60
1	E13	I.C. DEC 7472	1905580	59
2	E4,E12	I.C. DEC 7400	1903975	58
1	E3	I.C. DEC 7474	1905947	57
1	L6	INDUCTOR 120UH	1610663	56
2	L1,L2	INDUCTOR 56UH	1610661	55
3	L3,L4,L5	INDUCTOR 100UH	1610662	54
1	Q3	TRANSISTOR DEC 6534C	1503409-02	53
1	Q4	TRANSISTOR DEC 3009B	1503100	52
2	Q1,Q2	TRANSISTOR 2N2904	1501742	51
				50
1	R13	POT 1K 1/2W 20% 62PR	1309150-03	49
2	R54,55	POT 10K 3/4W 10% 76PR	1309143-10	48
2	R16,R17	RES.27K 1/4W 5%	1305346	47
2	R27,R28	RES.6.2K 1/4W 5%	1303179	46
1	R60	RES 220K 1/4W 5%	1302092	45
1	R4	RES.270 1/2W 5%	1300265	44
2	R40,R41	RES 560 1/4W 5%	1301450	43
6	R6,9,45,53,70,71	RES 5.6K 1/4W 5%	1301874	12
1	R11	RES. 1.1K 1/4W 5%	1301475	41
1	R58	RES.3.3K 1/4W 5%	1300439	40
1	R62	RES.750 1/4W 5%	1301401	39
2	R15,R21	RES.1.2K 1/4W 5%	1301320	38
2	R30,R31	RES.18K 1/4W 5%	1300496	37
6	R5,8,18,38,39,57	RES.10K 1/4W 5%	1300479	36
1	R59	RES.4.7K 1/4W 5%	1300447	35
1	E11	I.C. DEC. 74123	1910436	34
16	R1,R2,R3 R20,R34-37	RES. 1K 1/4W 5%	1300365	33
	R46 R56,R63-68			
2	R24,R12	RES.470 1/4W 5%	1300316	31
1	R43	RES 470 1/2W 5%	1300315	30
3	R22,R25,R61	RES.330 1/4W 5%	1300295	29
2	R29,R32	RES 220 1/4 5%	1300271	28
2	R26,R42	RES. 180 1W 5%	1300262	27
1	R19	RES 180 1/2W 5%	1300260	26
1	R14	RES. 150 1/4W 5%	1300250	25
1	R23	RES 150 1/2W 5%	1300249	24
1	R33	RES. 100 1/4W 5%	1300229	23
8	1-8	GOLD WIRE WRAP PINS	9009217	22
18	D1,D3-9,D11-16,D22-25	DIODE D672	1105275	21
1	D2	DIODE IN.751A(5.1V ZENER)	1110954	20
				19
3	D10,D17,D18	DIODE IN 753A (7.5V ZENER)	1102421	18
13	C9,C33,C36	CAP 15UF 50V 10% TOL/CARBO-	1010031	17
1	C19	~~CAP. 18PF 100V 5% D.M.~~	~~1000008~~	~~16~~
4	C12,C13,C18,C19	CAP.01 UF 50V AXIAL	1001610-00	15
14	C4,10,11,16,17,22,24,29,31	CAP. .01UF 100V 20% DISC	1001610-01	14
	32,34,35,37,36			
2	C8,C7	CAP 10UF 35V 20% S. TANT	1000089	13
3	C3,C23,C25	CAP 6.8UF 35V 20% S. TANT	1000047	12
1	C2	CAP 680PF 100V 5% D.M.	1000021	11
2	C6,C30	CAP 470PF 100V 5% D.M.	1000024	10
1	C29	CAP 150PF 100V 5% D.M.	1000018	9
1	C41	CAP 27PF 100V 5% D.M.	1001738	8
1	C14	CAP 56PF 100V 5% D.M.	1000012	7
3	C1,C39,C40	CAP 47PF 100V 5% D.M.	1000011	6
2	C5,C15	CAP 18 PF 100V 5% D.M.	1002608	5
		ETCHED CIRCUIT BOARD	9009743	4
		MODULE ECO HISTORY	B-MM-G180-0-6	3
		ASSY. DRILLING HOLE LAYOUT	E-AH-G180-0-5	2
		X-Y COORDINATE HOLE LOCATION	K-CO-G180-0-4	1

ETCH BOARD REV. L

PARTS LIST

A/R				
		WIRE, 30 AWG GREEN	9105740-55	80
1	D26	DIODE IN748A (3.9V ZENER)	1100122	79
1	R69	RES. 180 1/4W 5%	1301322	78
2	R7,R10	RES. 100 1/4W 5%	1300229	77
1		NOISE SHIELD	5009693	76
2		HANDLE, FLIP CHIP-GREEN	9006337-01	75
7	TPG,TP1 THRU TP6	SWAGE LUG	9007791	74
2		HEX NUT, NYLON, #2-56	9007263	73
2		EYELET #684-7	9006732	72
2		INTERNAL LOCK WASHER #2-56	9006631	71
2		HEX NUT #2-56	9006555	70
2		SCREW 4/40X3/8	9006011-4	69
2		SCREW PAN HD #2-56X5/16	9006002-1	68
2		KEP NUT 4/40	9006557	67

		IN746A	SAME
2N2904	2N2118A	IN753A	SAME
DEC 3009B	2N3009	IN751A	SAME
DEC 6534C	MPS6534	D672	IN3653
DEC NO.	EIA NO.	DEC NO.	EIA NO.

SEMICONDUCTOR CONVERSION CHART

REV.	DESCRIPTION	CHANGE NO.	CHK
R	ADD JUMPER	G180-00006	
K	DALE JENSON	G180-00008	
L			
M		G180-00009	
N	K. FREY		
P		G180-00011	

DRN. R. DOUCETTE DATE 10-30-71
CHKD. NANCY MOORE DATE 11-30-71
ENG. DAVE JACKSON DATE 12-22-70
PROD. ENG. DATE
PROD. R. KOELSCHING DATE 12-28-70
NEXT HIGHER ASSY
SCALE
SHEET 1 OF 2

digital

TITLE DEC PACK READ/WRITE

SIZE D CODE CS DRAWING G180-0-1 REV. R

DIST.

THIS SCHEMATIC IS FURNISHED ONLY FOR TEST AND MAINTENANCE PURPOSES. THE CIRCUITS ARE PROPRIETARY IN NATURE AND SHOULD BE TREATED ACCORDINGLY
COPYRIGHT 1971 BY DIGITAL EQUIPMENT CORPORATION

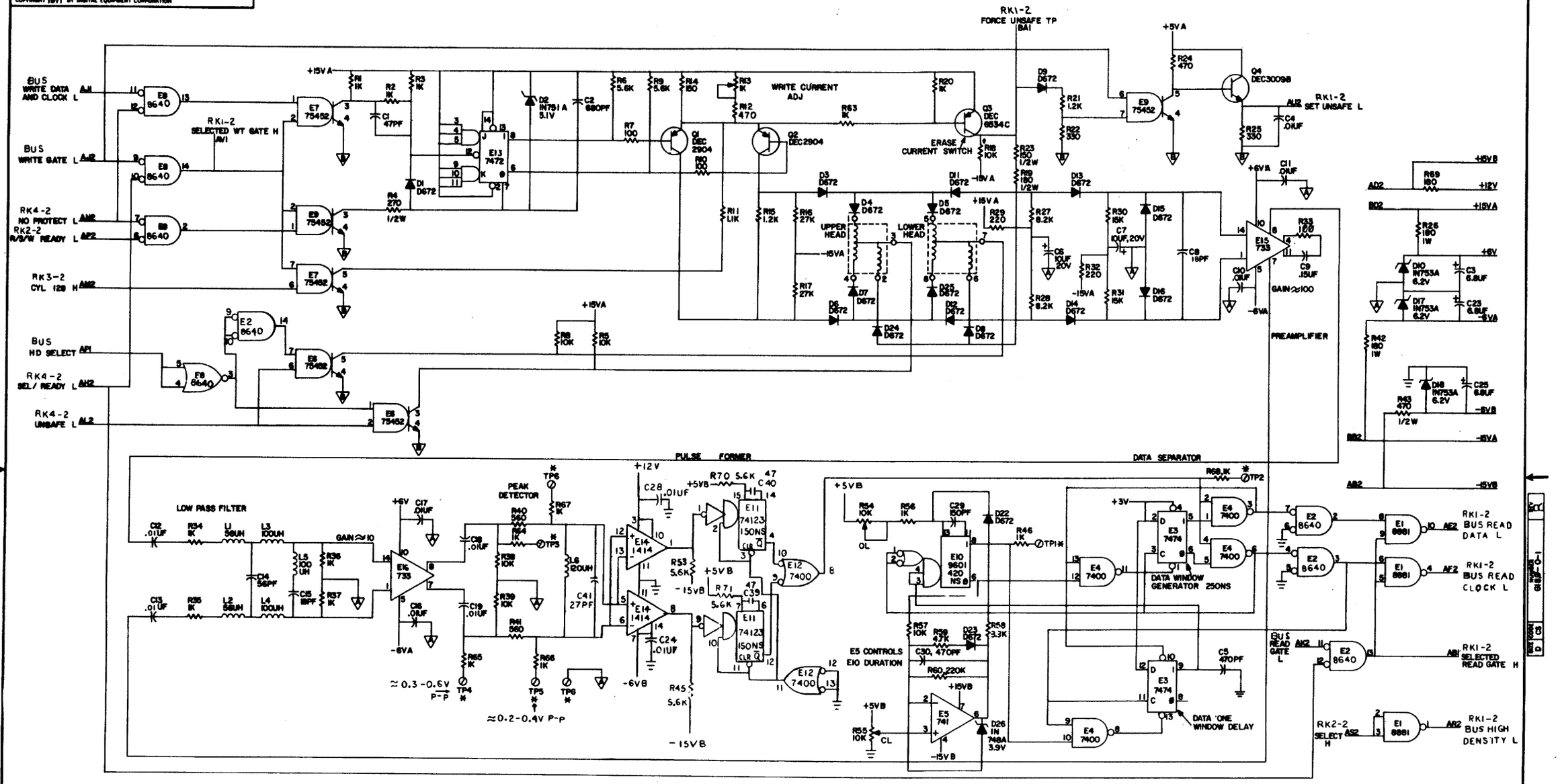

UNLESS OTHERWISE INDICATED:
* INDICATES SWAGE LUG
▽ = ANALOG GND "A" AT1
▽ = ANALOG GND "B" AT1
⏚ = DIGITAL GND AC2
----- = COMPONENTS NOT MOUNTED ON BOARD
ALL TIMES INDICATED ARE NOMINAL

SLOT-1

TRANSISTOR & DIODE CONVERSION CHART

DEC	EIA	DEC	EIA
DEC-6534C	MPS-6534	DEC-D672	EIA-D672
DEC-3009B	2N3009	DEC-D673A	EIA-D673A
2N2904	2N2904A	DEC-D674A	EIA-D674A
		DEC-D675A	EIA-D675A
		DEC-D676A	EIA-D676A

DIGITAL EQUIPMENT CORPORATION MAYNARD, MASSACHUSETTS

TITLE DEC PACK READ/WRITE RK1-2

SIZE D CODE CS NUMBER G185-0-1 REV R

PRINTED CIRCUIT REV.

SHEET 2 OF 2

THIS DRAWING AND SPECIFICATION, HEREIN, ARE THE PROPERTY OF DIGITAL EQUIPMENT CORPORATION AND SHALL NOT BE REPRODUCED OR COPIED OR USED IN WHOLE OR IN PART AS THE BASIS FOR THE MANUFACTURE OR SALE OF ITEMS WITHOUT WRITTEN PERMISSION. COPYRIGHT © 1976, DIGITAL EQUIPMENT CORPORATION

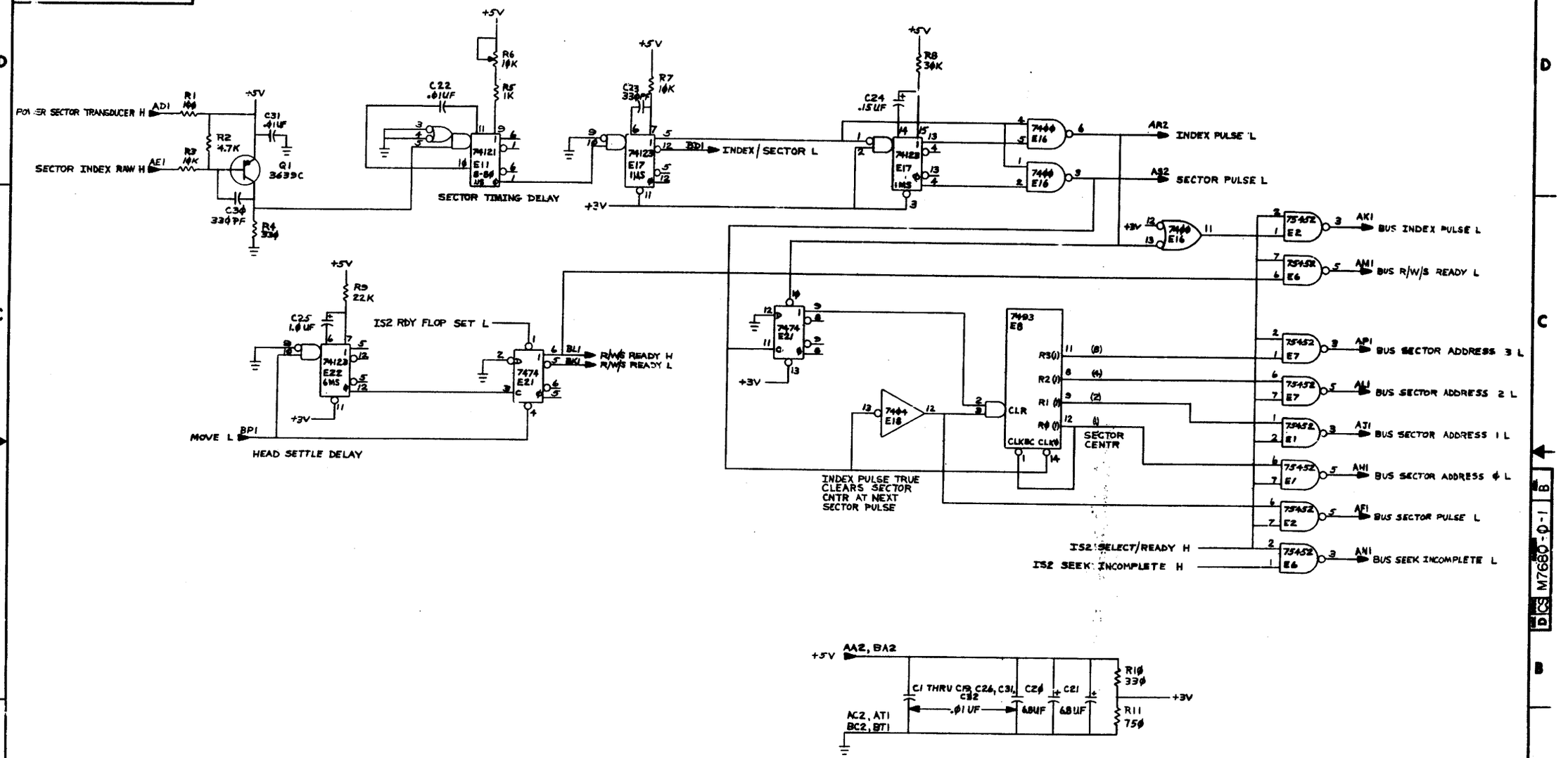

DRN.		FIRST USED ON	20-0030
CHK'D		TITLE	(IS1) DEC PACK INDEX AND SECTOR
ENG.			
PROJ. ENGR.			
PROD.			
NEXT HIGHER ASSY.			
D-UA-M7680-0-0		SIZE D	CODE CS
SCALE		NUMBER M7680-0-1	REV. B
SHEET 1 OF 2		DIST.	

REVISIONS		
ECO NO.		REV.
M7680-00001		B
S. RADOFF		
5-31-77		

D CS M7680-0-1 B

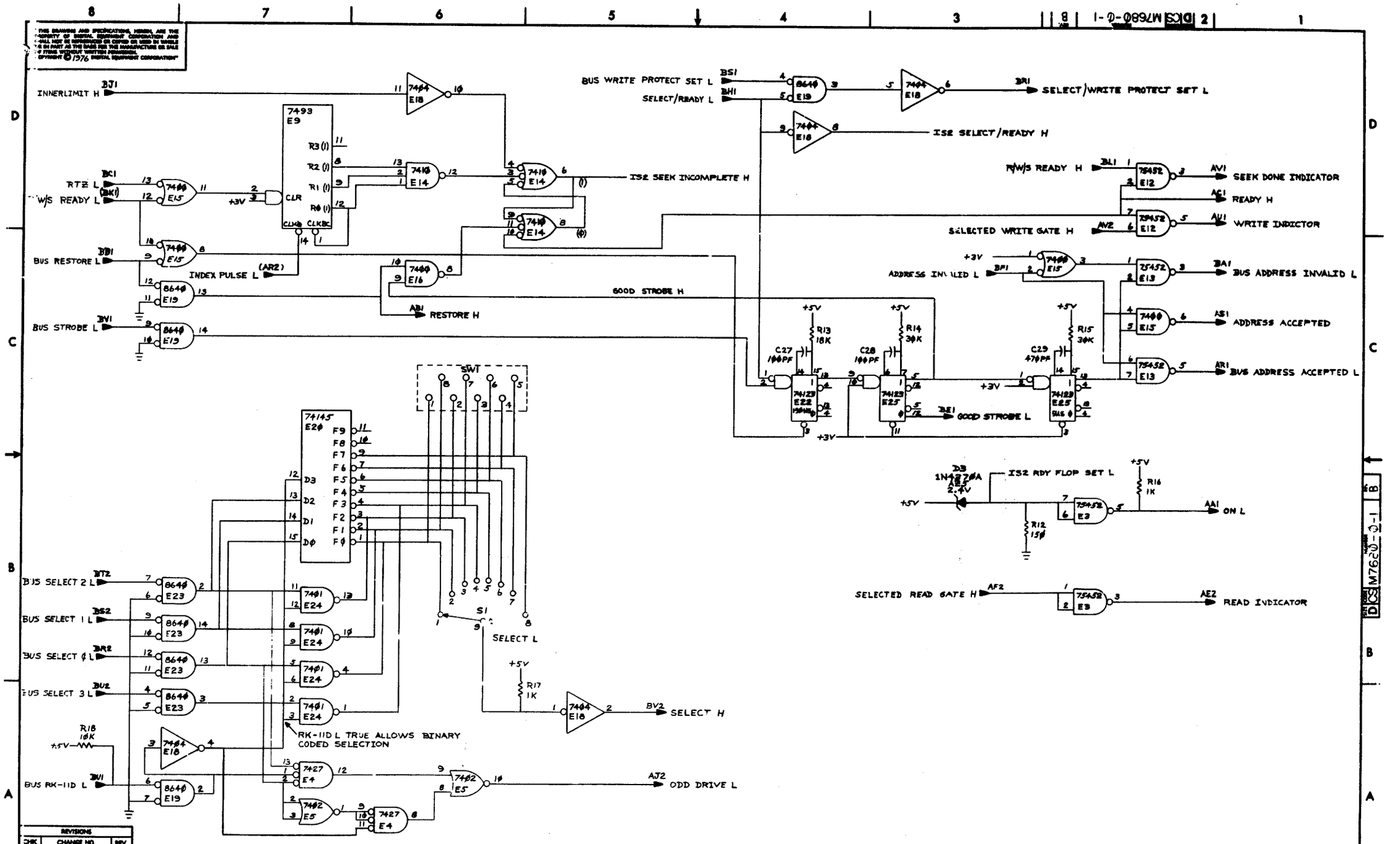
INNERLIMIT H
BJ1
7404 E18
7493 E9
R3 (I)
R2 (I)
R1 (I)
R0 (I)
CLR
CLKA
CLKBC
RTE L
W/S READY L
BK1
7400 E15
+3V
7410 E14
ISZ SEEK INCOMPLETE H
BUS RESTORE L
BD1
INDEX PULSE L
(AR2)
7400 E16
8640 E19
GOOD STROBE H
AB1
RESTORE H
BUS STROBE L
BV1
BUS WRITE PROTECT SET L
BS1
SELECT/READY L
BH1
ISZ SELECT/READY H
BR1
SELECT/WRITE PROTECT SET L
R/W/S READY H
BL1
75452 E12
AV1
SEEK DONE INDICATOR
AC1
READY H
SELECTED WRITE GATE H
AV2
WRITE INDICTOR
ADDRESS INVALID L
BF1
BA1
BUS ADDRESS INVALID L
AS1
ADDRESS ACCEPTED
AR1
BUS ADDRESS ACCEPTED L
C27 100PF
R13 18K
C28 100PF
R14 30K
C29 470PF
R15 30K
74123 E22
74123 E25
BE1
GOOD STROBE L
D3 1N4270A
ISZ RDY FLOP SET L
R16 1K
R12 150
AA1
ON L
SELECTED READ GATE H
AF2
AE2
READ INDICATOR
SW1
74145 E20
BUS SELECT 2 L
BT2
BUS SELECT 1 L
BS2
BUS SELECT 0 L
BR2
BUS SELECT 3 L
BU2
R18 10K
BUS RK-11D L
BU1
7401 E24
7427 E4
7402 E5
RK-11D L TRUE ALLOWS BINARY CODED SELECTION
S1
SELECT L
R17 1K
BV2
SELECT H
AJ2
ODD DRIVE L
REVISIONS
CHK
CHANGE NO.
REV.
TITLE
DEC PACK INDEX AND SECTOR (IS2)
SIZE
CODE
NUMBER
REV.
D
CS
M7680-0-1
B
SCALE
SHEET 2 OF 2
DIST.
M7620-0-1

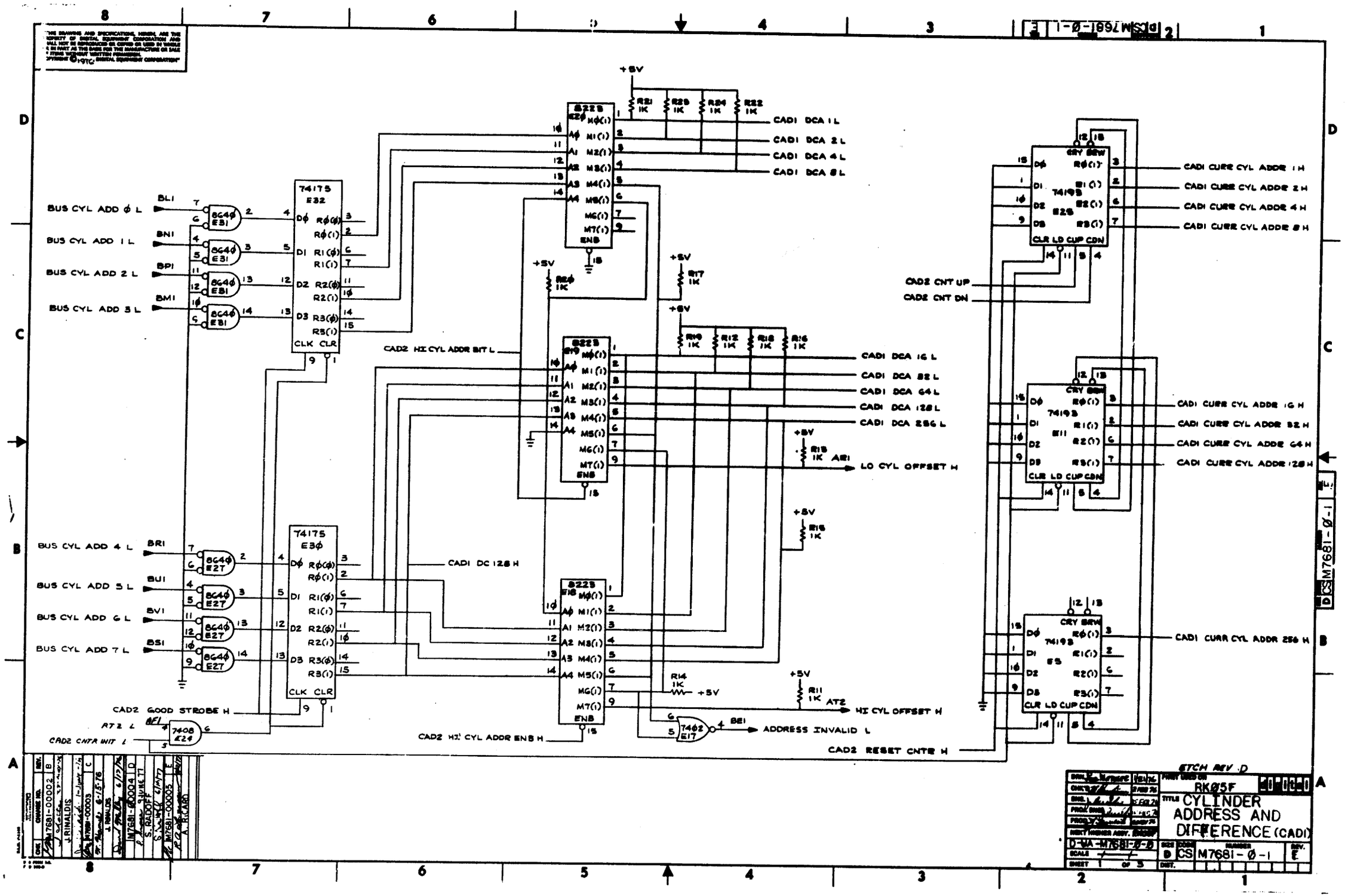
BUS CYL ADD Ø L
BUS CYL ADD 1 L
BUS CYL ADD 2 L
BUS CYL ADD 3 L
BUS CYL ADD 4 L
BUS CYL ADD 5 L
BUS CYL ADD 6 L
BUS CYL ADD 7 L
74175 E32
74175 E30
8223 E20
8223 E19
8223 E18
74193 E25
74193 E11
74193 E5
7408 E24
7402 E17
CADI DCA 1 L
CADI DCA 2 L
CADI DCA 4 L
CADI DCA 8 L
CADI DCA 16 L
CADI DCA 32 L
CADI DCA 64 L
CADI DCA 128 L
CADI DCA 256 L
CADI DC 128 H
CAD2 HI CYL ADDR BIT L
CAD2 GOOD STROBE H
CAD2 CNTR INIT L
CAD2 HI CYL ADDR ENB H
CAD2 CNT UP
CAD2 CNT DN
CAD2 RESET CNTR H
CADI CURR CYL ADDR 1 H
CADI CURR CYL ADDR 2 H
CADI CURR CYL ADDR 4 H
CADI CURR CYL ADDR 8 H
CADI CURR CYL ADDR 16 H
CADI CURR CYL ADDR 32 H
CADI CURR CYL ADDR 64 H
CADI CURR CYL ADDR 128 H
CADI CURR CYL ADDR 256 H
LO CYL OFFSET H
HI CYL OFFSET H
ADDRESS INVALID L
+5V
ETCH REV D
RK05F
CYLINDER ADDRESS AND DIFFERENCE (CADI)
D-UA-M7681-0-0
SIZE D
CODE CS
M7681-0-1
REV E
SHEET 1 OF 3

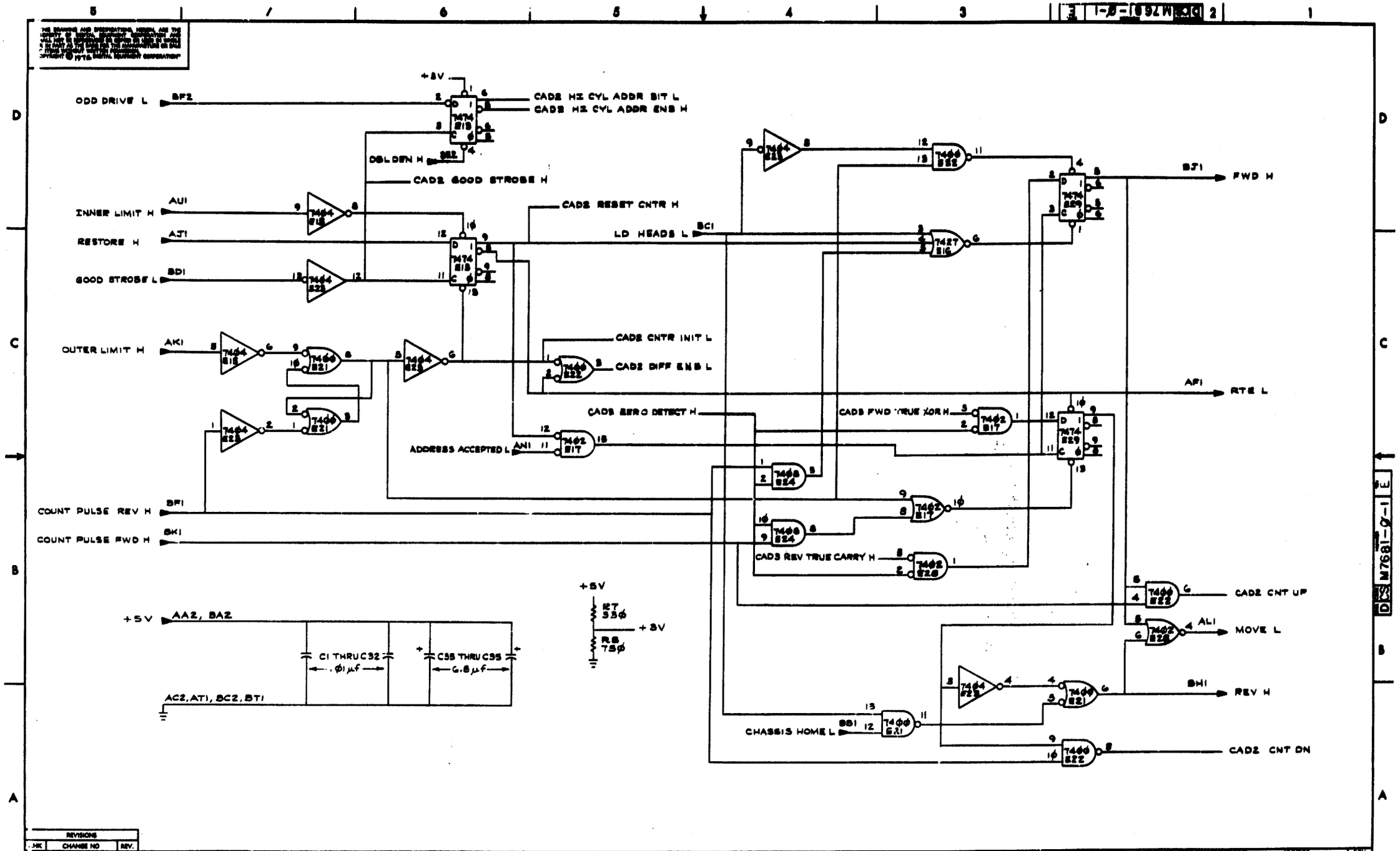

REVISIONS		
HK	CHANGE NO	REV.

TITLE CYLINDER ADDRESS AND DIFFERENCE (CAD2)

DCS M7681-0-1 REV. E

SCALE — SHEET 2 OF 3

C FORM NO. D 130

"THIS DRAWING AND SPECIFICATION, HEREIN, ARE THE PROPERTY OF DIGITAL EQUIPMENT CORPORATION AND SHALL NOT BE REPRODUCED OR COPIED OR USED IN WHOLE OR IN PART AS THE BASIS FOR THE MANUFACTURE OR SALE OF ITEMS WITHOUT WRITTEN PERMISSION. COPYRIGHT © 1976 DIGITAL EQUIPMENT CORPORATION"

NOTE:
1. FOR BK65J I.C. LOCATION E1 IS USED
   FOR BK65F I.C. LOCATION E2 IS USED
2. FOR BK65J S1 IS IN THE ON POSITION
   FOR BK65F S1 IS IN THE OFF POSITION

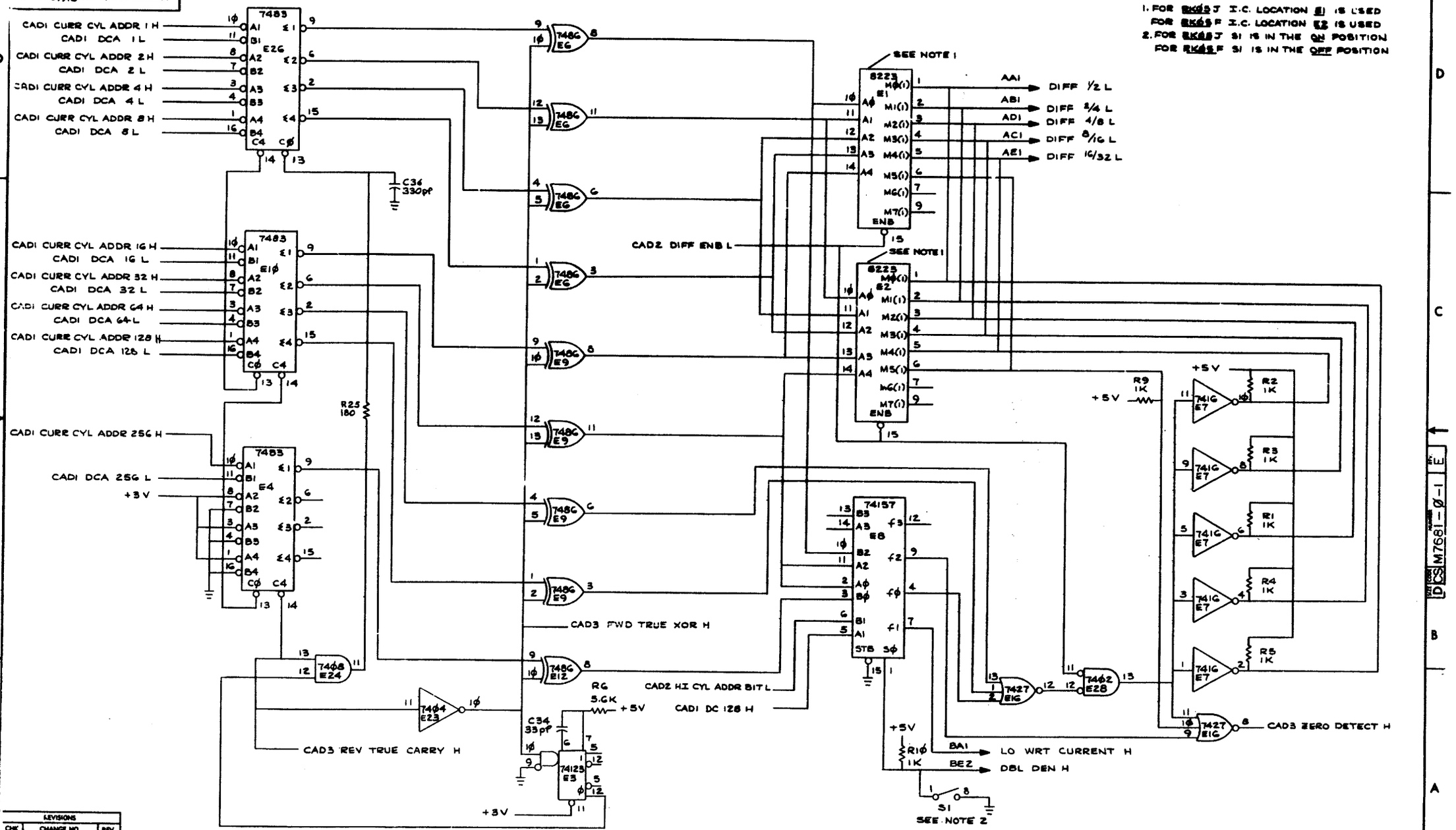

REVISIONS		
CHK	CHANGE NO.	REV.

TITLE CYLINDER ADDRESS AND DIFFERENCE (CAD3)

SIZE D CODE CS NUMBER M7681-Ø-1 REV. E

SCALE — SHEET 3 OF 5 DIST.

DEC FORM NO. DRD 139

This drawing and specifications, herein, are the property of Digital Equipment Corporation and shall not be reproduced, or copied or used in whole or in part as the basis for the manufacture or sale of items without written permission.

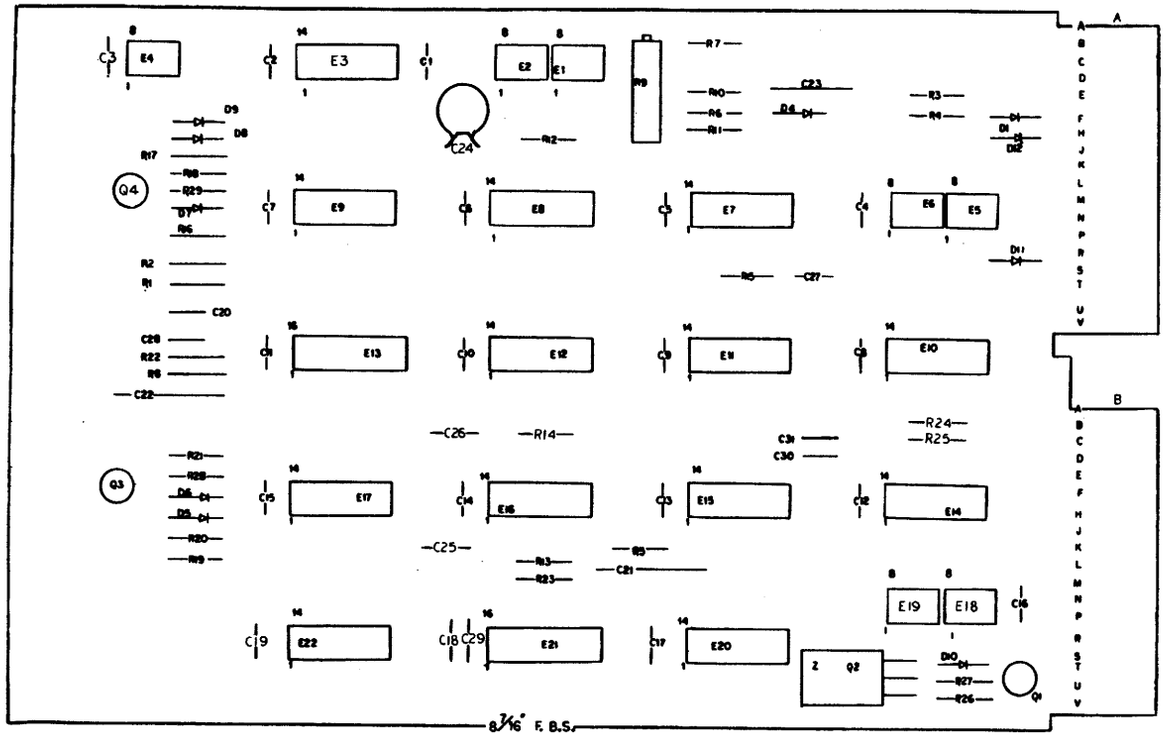

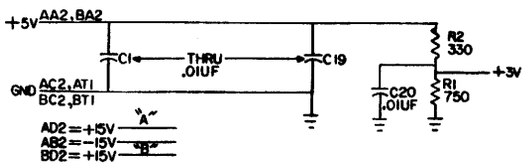

QTY	REF DESIGNATION	DESCRIPTION	PART NO.	ITEM NO.
		PARTS LIST		
ETCH BOARD REV	K			

IN748 3.9V	SAME	DEC6534D	MPS6534
IN746A 3.3V	SAME	DEC44C3	
IN4001	SAME	IN759 S	SAME
D670	IN3653		
D664	IN3606		
DEC6531	MPS6531		
DEC2219	2N2219		
DEC NO.	EIA NO.	DEC NO.	EIA NO.

SEMICONDUCTOR CONVERSION CHART

REVISIONS				
REV	CHANGE NO.	CHK		
P	M7701-00011		S. RADOFF 6-27-77	
N	M7701-00009		D. JENSEN 4-3-73	
M	M7701-00008		D. JENSEN 2-21-73	
L	M7701-00007		D. JENSEN 11-30-72	
K	M7701-00006		D. JENSEN 10-4-72	
J	M7701-00005		E.S. IMMONS 9/12/72	
H	M7701-00004		D. JENSEN 8-25-72	
F	M7701-00003		D. JENSEN 9-21-72	
F	M7701-00002		DALE JENSEN 2-22-72	
D	M7701-00001	A	D. JENSEN 1-20-72	

DRAWN Roger V. Doucette DATE 10-27-71
CHKD. Nancy Hodge DATE 11-3-71
ENG. DATE 12-7-71
PROJ. ENG. DATE 12-9-71
PROD. DATE 1/21/72
NEXT HIGHER ASSY
SCALE
SHEET 1 OF 3

digital EQUIPMENT CORPORATION MAYNARD MASSACHUSETTS

TITLE DISK ENG. CONTROL + INTERLOCK

SIZE D CODE CS NUMBER M7701-0-1 REV. P

DIST.

DEC FORM NO. CRD-220

"THIS DRAWING AND SPECIFICATIONS, HEREIN, ARE THE PROPERTY OF DIGITAL EQUIPMENT CORPORATION AND SHALL NOT BE REPRODUCED OR COPIED OR USED IN WHOLE OR IN PART AS THE BASIS FOR THE MANUFACTURE OR SALE OF ITEMS WITHOUT WRITTEN PERMISSION. COPYRIGHT ©1978 DIGITAL EQUIPMENT CORPORATION"

QTY	REF DESIGNATION	DESCRIPTION	PART NO.	ITEM NO
		X-Y COORDINATE HOLE LOCATION	K-CO-M7701-0-4	1
		ASSY/DRILLING HOLE LAYOUT	E-AH-M7701-0-5	2
		MODULE ECO HISTORY	B-MH-M7701-0-6	3
1		ETCHED CIRCUIT BOARD	5009714	4
25	C1-C20, C25-C27, C30, C31	CAP, .01 UF, 100V, 20%, DISC	1001810	5
1	C21	CAP, .15 UF, 20V, 20%, TANT	1004812	6
1	C22	CAP, .10 UF, 20V, 20%, TANT	1004513	7
1	C23	CAP, .15 UF, 35V, 20%, TANT	1002180	8
2	C28, C29	CAP, 470 PF, 100V, 5%, DM	1000024	9
1	D0	DIODE, D684	1100114	10
2	D1, D11	DIODE, D670	1102182	11
2	D9, D10	DIODE, IN4001	1102942	12
1	D6	DIODE, IN746A, 3.3V	1104060	13
1	D4	DIODE, IN740, 3.9V	1100121	14
2	D5, D7	DIODE, IN759S, 12V	1110643	15
A/R		GRIPLETS	1210244-0	16
1	R27	RES, 100 OHMS, ¼W, 5%	1300229	17
2	R2, R3	RES, 330 OHMS, ¼W, 5%	1300295	18
2	R16, R19	RES, 470 OHMS, ¼W, 5%	1300316	19
1	R1	RES, 750 OHMS, ¼W, 5%	1301401	20
9	R12, R13, R15, R20, R24, R25, R26, R29, R14	RES., 1K, ¼W, 5%	1300365	21
1	R28	RES, 1.5K, ¼W, 5%	1300391	22
1	R4	RES, 680 OHMS, ¼W, 5%	1301424	23
2	R11, R21	RES, 47K, ¼W, 5%	1300447	24
1	R18	RES, 5.6K, ¼W, 5%	1301874	25
5	R5, R8, R17, R22, R23	RES, 10K, ¼W, 5%	1300479	26
				27
				28
2	R7, R10	RES, 1M, ¼W, 5%	1300595	29
1	R6	RES, 10 M, ¼W, 5%	1302868	30
1	R9	RES, 10 K, ¾W, 10%, 76 PR	1309143-10	31
1	Q4	TRANSISTOR, DEC 0531	1509338	32
1	Q1	TRANSISTOR, DEC 2219	1501881	33
1	Q3	TRANSISTOR, DEC 0534D	1503409-00	34
1	Q2	TRANSISTOR, DEC 44C3	151671	35
4	E3, E7, E16, E14	I.C., DEC 7400	1905575	36
1	E20	I.C., DEC 7402	1909004	37
2	E11, E8	I.C., DEC 7404	1909606	38
2	E12, E10	I.C., DEC 7410	1905576	39
2	E9, E15	I.C., DEC 7474	1905547	40
2	E22, E17	I.C., DEC 7493	1909054	41
2	E21, E13	I.C., DEC 74123	1910436	42
6	E2, E4, E6, E5, E18, E19	I.C., DEC 75451	1910206	43
1	E1	I.C., DEC 301	1910262	44
4		EYELET #GSL-7	9006732	45
2		HANDLE FLIP CHIP - MAGENTA	9006337-06	46
1		SCREW #4-40 X 5/16	9006610-1	47
1		NUT, KEP #4-40	9006557	48
1	D12	DIODE, IN5248B, 18V, 5%	1110766	49
1	C24	CAP, .047 UF, 16V, DISC	1009670	50

REVISIONS		
CHK	CHANGE NO.	REV.

TITLE DISK ENG. CONTROL +INTERLOCK

SCALE — SHEET 2 OF 3

SIZE D CODE CS NUMBER M7701-0-1 REV. P

DIST.

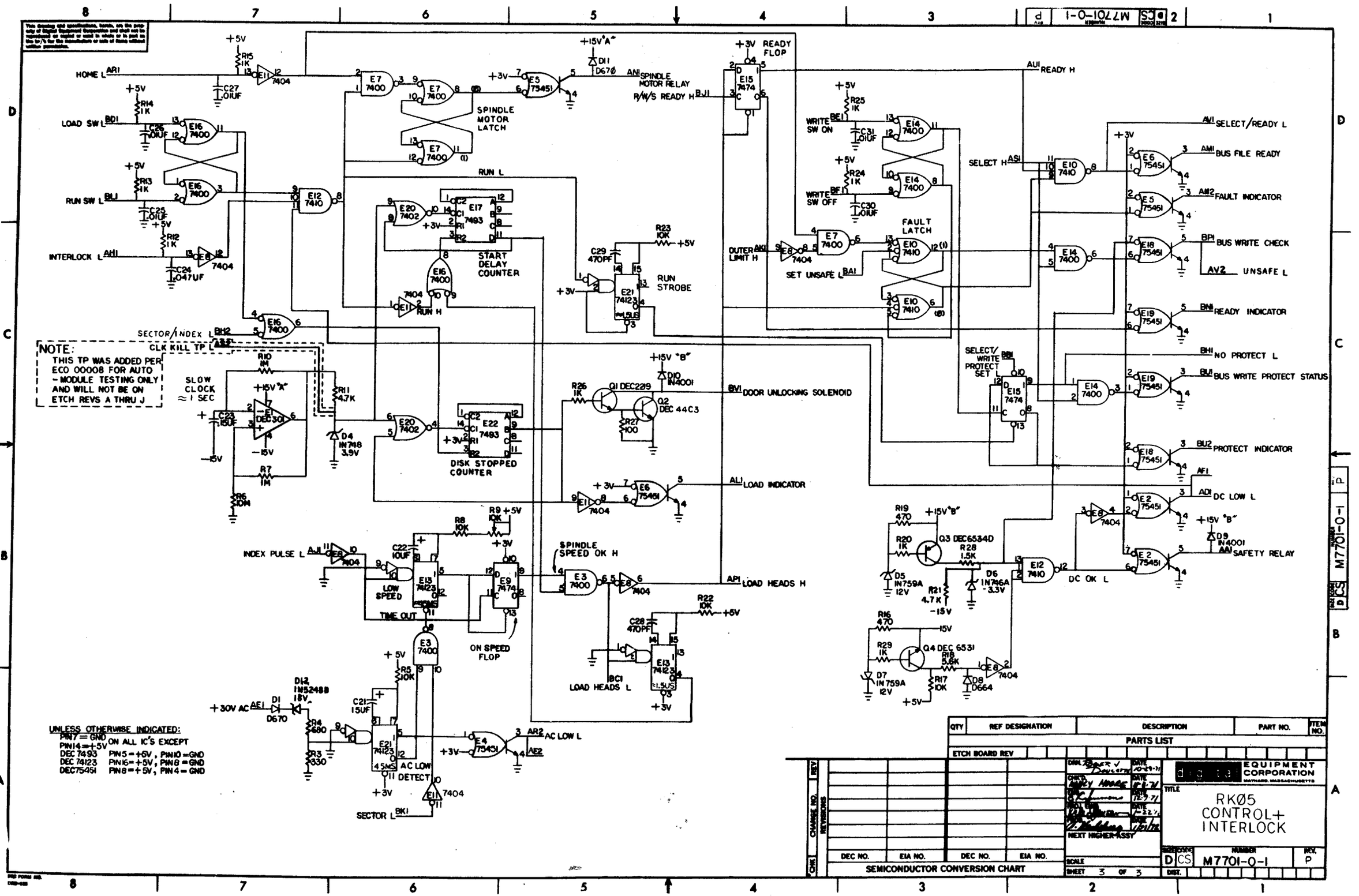
HOME L
LOAD SW L
RUN SW L
INTERLOCK L
SECTOR/INDEX L
CLK KILL TP L
SPINDLE MOTOR LATCH
SPINDLE MOTOR RELAY
R/W/S READY H
READY FLOP
READY H
WRITE SW ON
WRITE SW OFF
SELECT H
SELECT/READY L
BUS FILE READY
FAULT INDICATOR
BUS WRITE CHECK
UNSAFE L
READY INDICATOR
NO PROTECT L
BUS WRITE PROTECT STATUS
PROTECT INDICATOR
DC LOW L
SAFETY RELAY
FAULT LATCH
OUTER LIMIT H
SET UNSAFE L
RUN L
RUN H
START DELAY COUNTER
RUN STROBE
SLOW CLOCK ≈ 1 SEC
DISK STOPPED COUNTER
DOOR UNLOCKING SOLENOID
LOAD INDICATOR
SELECT/WRITE PROTECT SET
INDEX PULSE L
LOW SPEED
TIME OUT
ON SPEED FLOP
SPINDLE SPEED OK H
LOAD HEADS H
LOAD HEADS L
DC OK L
+30V AC
AC LOW DETECT
AC LOW L
SECTOR L
NOTE:
THIS TP WAS ADDED PER ECO 00008 FOR AUTO - MODULE TESTING ONLY AND WILL NOT BE ON ETCH REVS A THRU J
UNLESS OTHERWISE INDICATED:
PIN7 = GND ON ALL IC'S EXCEPT
PIN14 = +5V
DEC 7493 PIN5 = +5V, PIN10 = GND
DEC 74123 PIN16 = +5V, PIN8 = GND
DEC75451 PIN8 = +5V, PIN4 = GND
QTY
REF DESIGNATION
DESCRIPTION
PART NO.
ITEM NO.
PARTS LIST
ETCH BOARD REV
DEC NO.
EIA NO.
SEMICONDUCTOR CONVERSION CHART
NEXT HIGHER ASSY
SCALE
SHEET 3 OF 3
EQUIPMENT CORPORATION
MAYNARD, MASSACHUSETTS
TITLE
RK05 CONTROL + INTERLOCK
SIZE
CODE
NUMBER
REV.
DCS
M7701-0-1
P
DIST.

THIS DRAWING AND SPECIFICATIONS, HEREIN, ARE THE PROPERTY OF DIGITAL EQUIPMENT CORPORATION AND SHALL NOT BE REPRODUCED OR COPIED OR USED IN WHOLE OR IN PART AS THE BASIS FOR THE MANUFACTURE OR SALE OF ITEMS WITHOUT WRITTEN PERMISSION.
COPYRIGHT © 1976 DIGITAL EQUIPMENT CORPORATION

NOTES:

PARTS LIST

QTY G938-YA	QTY G938-0	REF. DESIGNATION	DESCRIPTION	PART NO.	ITEM NO.
REF	REF		X-Y COORDINATE HOLE LOCATION	K-CO-G938-0-4	1
REF	REF		ASSY/DRILLING HOLE LAYOUT	E-AH-G938-0-5	2
REF	REF		MODULE ECO HISTORY	B-MH-G938-0-6	3
1	1		ETCHED CIRCUIT BOARD	5009388	4
4	4	C2,C3,C4,C5	CAP. .015 UF 50V 2% POLY CARB	1010646	5
1	1	C6	CAP. 8200 PF 100V MICA	1000061	6
1	1	C7	CAP. .022 UF 100V 10% MYLAR	1002323	7
3	3	C8,C10,C14	CAP. 15 UF 20V 10% S. TANT	1004812	8
11	11	C9,C11,C12,C13,C15 THRU C20	CAP. .01 UF 100V 20% DISC.	1001610-01	9
7	7	D1 THRU D4,D23 THRU D25	DIODE D662	1100113	10
10	10	D5 THRU D14	DIODE D664	1100114	11
2	2	D15, D16	DIODE IN758A 10V	1100125	12
4	4	D19 THRU D22	DIODE IN746A	1104860	13
7	7	R1,R15,R17,R46,R49,R52,R55	RES. 15K 1/4 W 5%	1300496	14
1	1	R2	RES. 13.3K 1/4 W 1% MF	1312565	15
1	1	R3	RES. 9.09K 1/8 W 1% MF	1304855	16
1	—	R4	RES. 34.8K 1/8W 1% MF	1303156	17
—	1	R4	RES. 68.1K 1/8W 1% MF	1305252	18
—	1	R5	RES. 34.8K 1/8W 1% MF	1303156	19
1	—	R5	RES. 21.5K 1/8W 1% MF	1303155	20
1	—	R6	RES. 11.5K 1/8W 1% MF	1309415	21
—	1	R6	RES. 21.5K 1/8W 1% MF	1303155	22
1	—	R7	RES. 5.62K 1/8W 1% MF	1305128	23
—	1	R7	RES. 11.5K 1/8W 1% MF	1309415	24
1	—	R8	RES. 2.74K 1/8W 1%	1304868	25
—	1	R8	RES. 5.62K 1/8W 1%	1305128	26
5	5	R9,R57,R59,R61,R70	RES. 10K 1/8W 1% MF	1303312	27
12	12	R10,R11,R32,R33,R35,R36,R38, R39,R67,R69,R84,R83.	RES. 19.6K 1/8W 1% MF	1309419	28
2	2	R12, R72	RES. 6.81K 1/8W 1% MF	1304870	29
—	2	R13, R19	RES. 4.64K 1/8W 1% MF	1304856	30
9	9	R14,R16,R43,R44,R45,R48, R51,R54,R68	RES. 1.5K 1/4 W 5%	1300391	31
5	5	R18,R47,R50,R53,R56	RES. 3.9K 1/4 W 5%	1300444	32
1	1	R20	RES. 200K 1/8W 1% MF	1305336	33
1	1	R21	RES. 3.83K 1/8 W 1% MF	1309413	34
—	1	R22	RES. 100K 1/4 W 5%	1302466	35
5	6	R23,R30,R41,R42,R65,R79	RES. 75K 1/4W 5%	1304841	36
5	5	R29,R64,R73,R76,R78	POT. 10K 3/4W 20% 76PR	1309143-10	37
3	3	R31, R66, R80	POT. 2K 3/4W 10% 76PR	1309143-08	38
3	3	R37,R40,R87	RES. 330 1/4 W 5%	1300295	39
5	5	R58,R60,R62,R71,R82	RES. 511 1/8W 1% MF	1302411	40
1	1	R75	RES. 24.3K 1/8W 1% MF	1309418	41
2	2	R84,R85	RES. 10 1/2W 5%	1300168	42
1	1	R86	RES. 2.7 1/2 W 10%	1309444	43
6	6	R89 THRU R94	RES. 22 1/4 W 5%	1301969	44
1	1	R88	RES. 750 1/4 W 5%	1301401	45
3	3	R20,R63,R77	RES. 1.96K 1/8 W 1% MF	1304833	46
—	1	R74	RES. 1.47K 1/8W 1% MF	1305108	47
3	3	R34,R95,R96	RES. 10K 1/4 W 5%	1300479	48
8	8	Q1 THRU Q4, Q11 THRU Q14	TRANSISTOR 2N5245	1509681	49
6	6	Q5 THRU Q10	TRANSISTOR DEC 6534D	1503409-00	50
1	1	E1	I.C. DEC 7404	1909686	51
1	1	E2	I.C. DEC 7413	1909989	52
2	2	E3,E4	I.C. DEC 301	1910282	53
1	1	E5	I.C. DEC 7400	1905575	54
7	7	E7,E8,E11 THRU E15	I.C. DEC 72741	1910298-00	55
4	4		EYELET # GS4-7	9006732	56
2	2		HANDLE, FLIP CHIP GREEN	9008??7-01	57
A/R	A/R		GRIPLET	1210244-0	58
1	—	R22	RES 200K, 1/8W, 1%	1305336	59
1	—	R23	RES 137K, 1/8W, 1%	1305442	60
2	—	R13,R19	RES 9.09K, 1/8W, 1%	1304855	61
1	—	R74	RES 2.94K, 1/8W, 1%	1301981	62
3	3	E6,E9,E10	IC DEC 72741	1910298-01	63

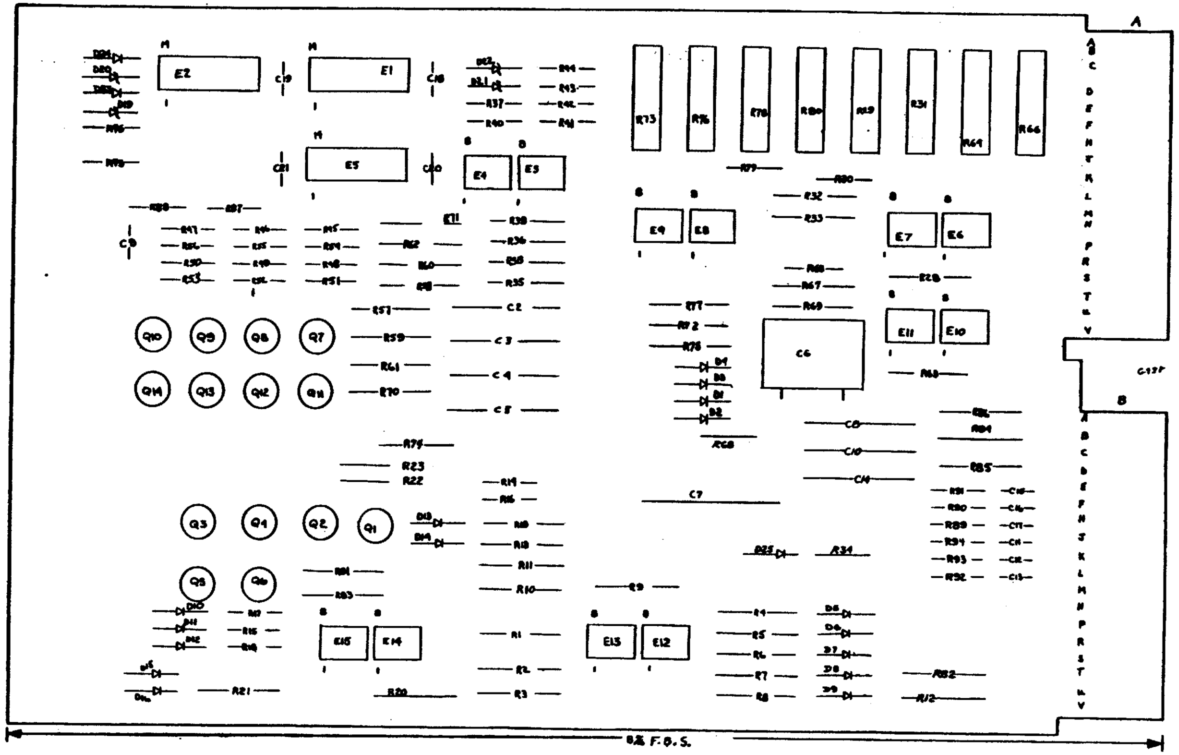

IC TYPE	GND	+5V
72741	SEE SHT 2	
LM301	SEE SHT 2	

GND AND 5V ARE USUALLY PIN 7 AND 14 RESPECTIVELY EXCEPTIONS ARE STATED ABOVE

IC PIN LOCATIONS

REVISIONS

REV.	CHANGE NO.
N	G938-00008 REVISED & REDRAWN J. RINALDIS
P	G938-00009 J. RINALDIS
R	G938-00010 J. RINALDIS
S	G938-00011 R. Vowles 11-FEB-77 S. RADOFF

SEMICONDUCTOR CONVERSION CHART

DEC NO.	EIA NO.
6534D	NONE
2N5245	
D662	IN645
D664	IN3606
1746A	SAME

FIRST USED ON OPTION MODEL

ETCH BOARD REV. K

DRN.	R. DOUCETTE	DATE 12-8-71
CHK'D.	DEVALL	DATE 12-9-71
ENG.	D. JENSEN	DATE 12-30-71
PROJ. ENG.	D. JENSEN	DATE 12-30-71
PROD.	A. KARLSBERG	DATE 2-3-72
NEXT HIGHER ASSY		

digital

TITLE DEC PACK HEAD POSITION SERVO PREAMP RK5-1

SIZE D CODE CS NUMBER G938-Ø-1 REV. S

SCALE —/— SHEET 1 OF 2

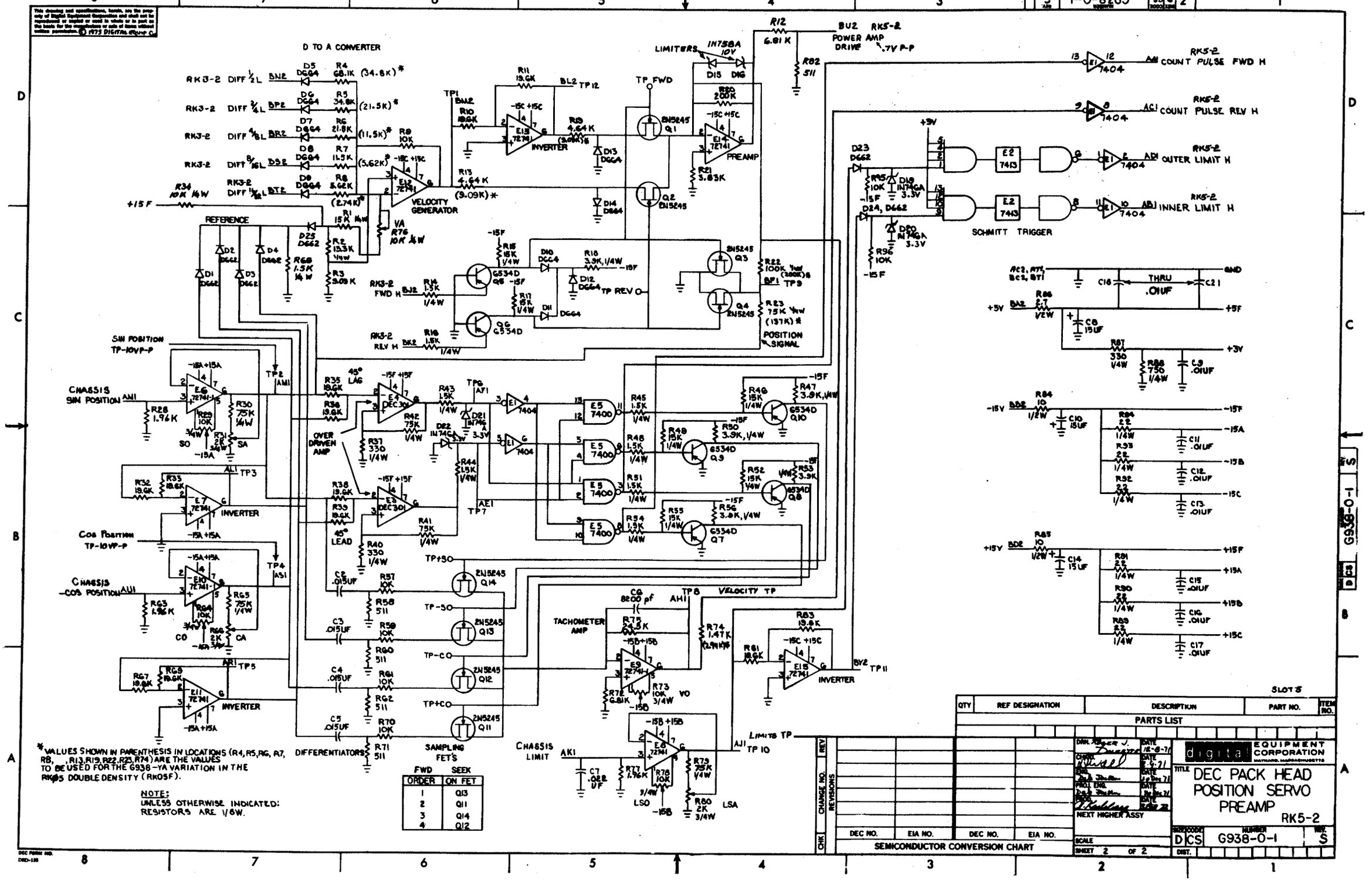

*VALUES SHOWN IN PARENTHESIS IN LOCATIONS (R4, R5, R6, R7, R8, , R13, R19, R22, R23, R74) ARE THE VALUES TO BE USED FOR THE G938-YA VARIATION IN THE RK05 DOUBLE DENSITY (RK05F).

NOTE:
UNLESS OTHERWISE INDICATED:
RESISTORS ARE 1/8W.

FWD ORDER	SEEK ON FET
1	Q13
2	Q11
3	Q14
4	Q12

THIS SCHEMATIC IS FURNISHED ONLY FOR TEST AND MAINTENANCE PURPOSES. THE CIRCUITS ARE PROPRIETARY IN NATURE AND SHOULD BE TREATED ACCORDINGLY
COPYRIGHT 1971 BY DIGITAL EQUIPMENT CORPORATION

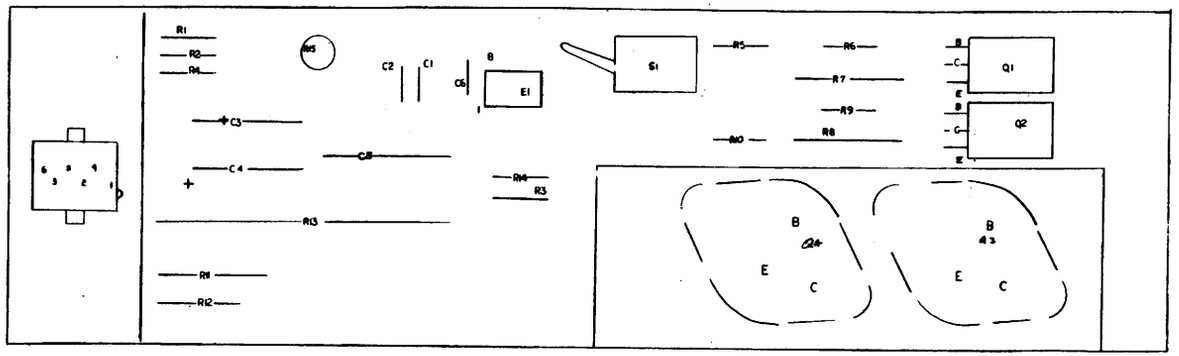

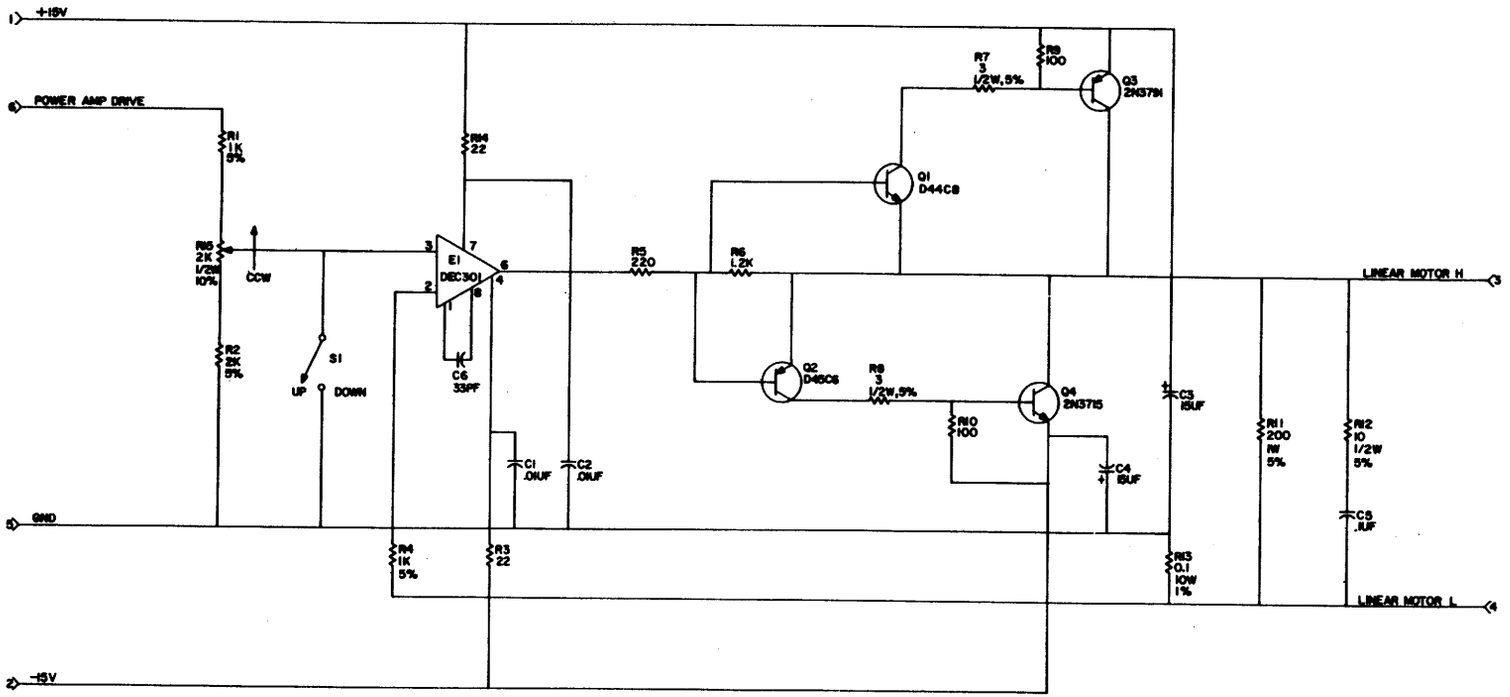

UNLESS OTHERWISE INDICATED:
RES. ARE 1/4W, 10%
R13 IS A CURRENT SAMPLING RES.

TRANSISTOR & DIODE CONVERSION CHART			
DEC	EIA	DEC	EIA
[illegible]			
[illegible]			
[illegible]			
[illegible]			

EQUIPMENT CORPORATION
MAYNARD, MASSACHUSETTS

TITLE DECPAK HEAD POS. SERVO PWR. AMP.

DWN	CHKD	NUMBER	REV
D	CS	H604-0-1	K

PRINTED CIRCUIT REV. K

NOTES:

1. APPLY THERMAL JOINT COMPOUND, ITEM 31, BETWEEN TRANSISTORS, Q3 & Q4 AND WASHER, ITEM 30, ALSO BETWEEN WASHER, ITEM 30 AND BRACKET, HEAT SINK, ITEM 25.

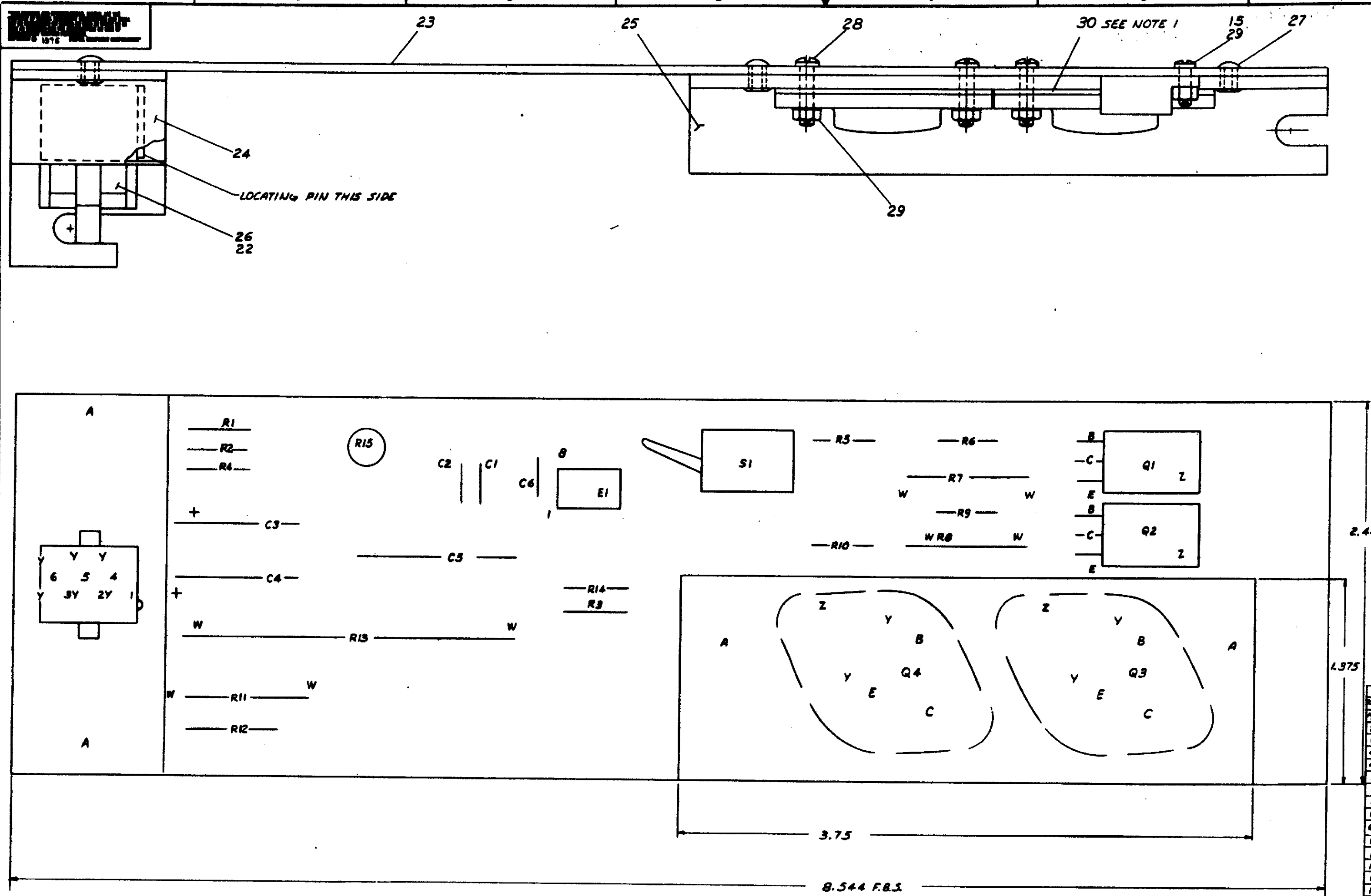

Qty	Ref.	Description	Dig./Part No.	Item No.
1		RES 2K, 1/4W, 5%	1302388	33
Ref		ASSY HOLE DRILLING [illegible]	D-AH-H604-0-5	32
A/R		COMPOUND THERMAL JOINT	9006268	31
2		INSULATOR, WASHER	9006721	30
6		NUT, KEP #4-40	9006337	29
4		SCR BIND. HD. SLOT 4-40 X [illegible]	9006012-4	28
4		EYELET .121 O.D. X .219 LG	9006732	27
1		6 PIN MATE-N-LOCK	1209330-06	26
1		BRACKET, HEAT SINK	[illegible]	25
1		BRACKET, SERVO BOARD	C-MD-5509812-00	24
1		ETCHED CIRCUIT BOARD	5009741	23
6		PINS FOR MATE-N-LOCK	1209456-01	22
1	E1	IC LM301	1910282	21
1	Q4	TRANS 2N3715	1503068	20
1	Q3	TRANS 2N3791	1509581	19
1	Q2	TRANS DEC D45C6	1510414	18
1	Q1	TRANS DEC D44C8 OR TIP31A	1510421	17
2	R4, R1	RES 1K, .25W, 5%	1300365	16
2		SCR #4-40 X 1/4 BIND. HD. SLOT	9006009-4	15
1	R15	POT 2K, .5W, 10%, 62PR	1309150-07	14
1	R6	RES 1.2K .25W 5%	1301320	13
1	R5	RES 220, .25W 5%	1300271	12
1	R11	RES 200 1W 5%	1302382	11
2	R2, R10	RES 100, .25W, 5%	1300229	10
2	R3, R14	RES 22 .25W, 5%	1301969	9
1	R12	RES 10, .5W, 5%	1300168	8
2	R7, R8	RES 3.0, 2W, 5%	1301643	7
1	R13	RES .1, 10W, 1%	1309108	6
1	S1	SWITCH, TOGGLE T-8001	1210209	5
2	C3, C4	CAP 15UF 20V 10%	1004812	4
1	C6	CAP 33PF, 100V, 5%	1000009	3
1	C5	CAP .1UF, 100V, 10%	1002342	2
2	C1, C2	CAP .01UF, 50V, 20%	1001610	1
Ref		MODULE ECO HISTORY	B-AH-H604-0-0	
Ref		X-Y COORDINATE HOLE LOC.	K-CO-H604-0-0	
Ref		CIRCUIT SCHEMATIC	D-CS-H604-0-1	

FIRST USED ON: RK05

TITLE: HEAD POSITION SERVO POWER AMP

NEXT HIGHER ASSY: D-UA-RK05-0-0

SCALE: 4/1

SHEET 1 OF 1

E UA H604-0-0 K

THIS SCHEMATIC IS FURNISHED ONLY FOR TEST AND MAINTENANCE PURPOSES. THE CIRCUITS ARE PROPRIETARY IN NATURE AND SHOULD BE TREATED ACCORDINGLY.
COPYRIGHT 1970 BY DIGITAL EQUIPMENT CORPORATION

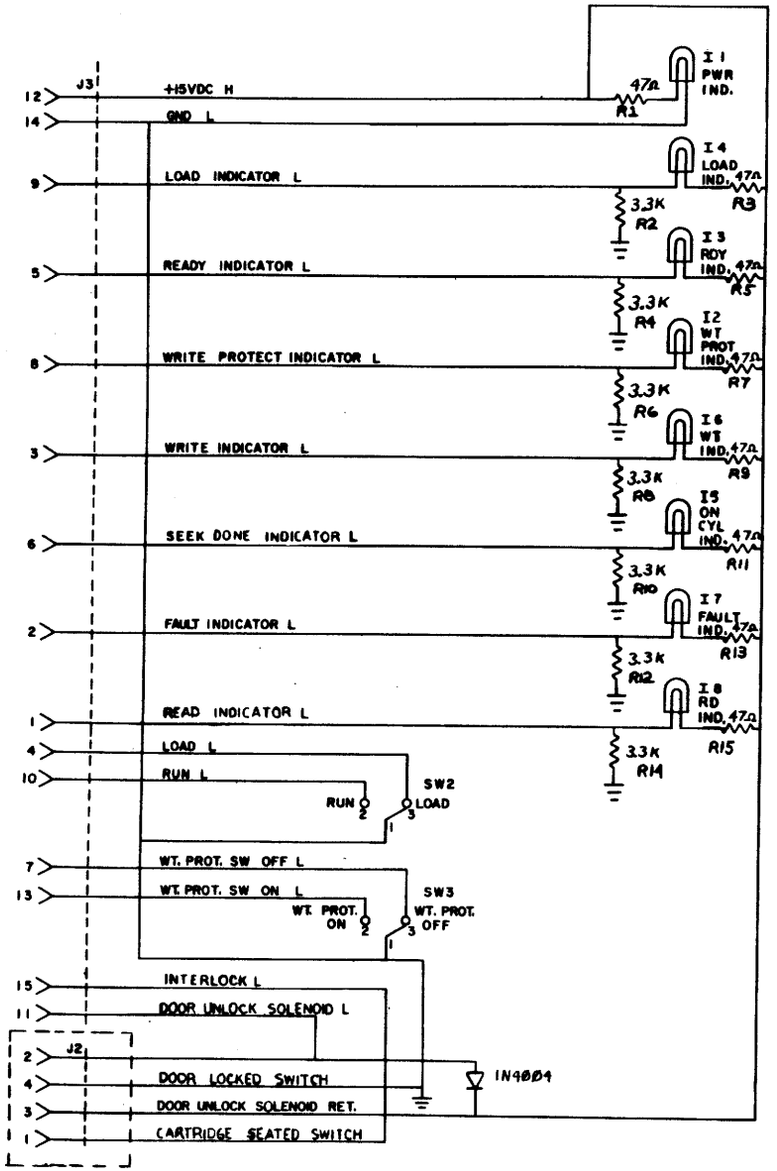

REVISIONS			
CHK	CHG NO.	REV.	
	00001	B	
		D	TENNEY
	00002	C	
			D. JENSEN
	00003	D	
	00004	E	
			J. RINALDIS
	00005	E	
			A. RICARD
	00006	F	
			S. KAISER

DRN. S. COOPER	DATE 11-20-71	
CHK'D	DATE 11-23-71	
ENG.	DATE	
PROD.	DATE	

TRANSISTOR & DIODE CONVERSION CHART			
DEC	EIA	DEC	EIA

digital EQUIPMENT CORPORATION
MAYNARD, MASSACHUSETTS

TITLE RK7-1
RK05 CONTROL PANEL

SIZE	CODE	NUMBER	REV.
C	CS	5409698-0-1	F

PRINTED CIRCUIT REV. E-P2

DEC FORM NO. DRC 102

REV.	F
NUMBER	5409698-0-1
CODE	CS
SIZE	C

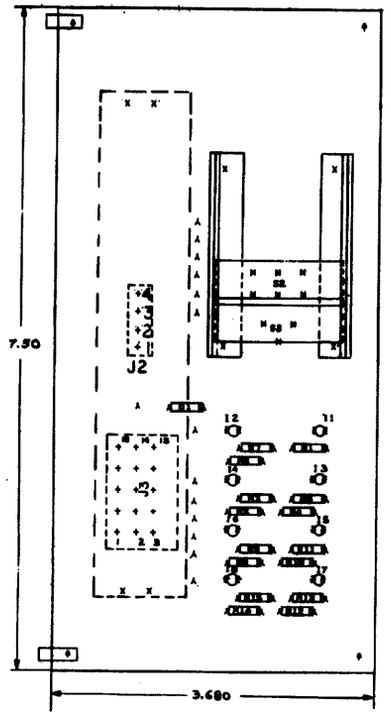

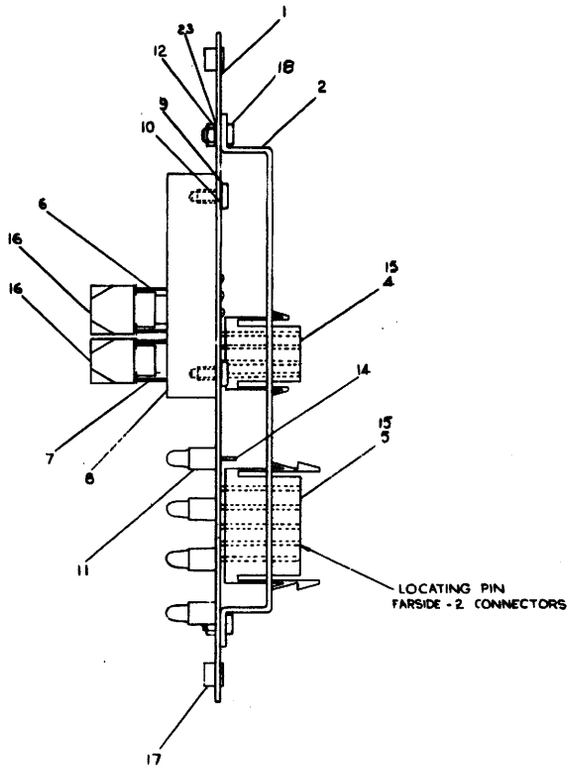

4		WASHER	9006655	23
1	D1	1N4004 DIODE	1105 756-00	22
7	R2,4,6,8,10,12,14	3.3 K 1/4 w, 5% RESISTOR	1300439-00	21
8	R1,3,5,7,9,11,13,15	47 Ω, 1/4 w, 5% RESISTOR	1300202-00	20
REF		ASSY/DRILLING HOLE LAYOUT	D-IN-5409698-0-5	19
4		SCR, PHL PAN HD #4-40×3/16 LG	9006010-1	18
2		NUT CLIP #6-32	9008423	17
2		SWITCH BUTTON	1205317-07	16
19		PIN SOCKET MATE-N-LOCK	1209456-01	15
16		TERMINAL SOLDERLESS	9007812	14
[illegible]		[illegible]	[illegible]	[illegible]
4		NUT KEPS #4-40	9006557	12
8	11,12,13,14,15,16,17,18	LAMP	1205969	11
4		LOCK WASHER INTERNAL 8-32	9006633	10
4		SCREW PHL PAN HEAD 32 X 5/16 LG	9006021-1	9
2		SWITCH MOUNTING BAR	B-MD-5409830-0-0	8
1	S3	SWITCH, ROCKER	1205375	7
1	S2	SWITCH, ROCKER	1205941	6
1	J3	HOUSING, SOCKET MATE-N-LOCK 6 PIN	1209350-15	5
1	J2	HOUSING, SOCKET MATE-N-LOCK 4 PIN	1209350-06	4
				3
1		CONNECTOR BRACKET	C-MD-5409629-0-0	2
1		ETCHED CIRCUIT BOARD	5009697	1
REF		MODULE ECO HISTORY	B-HH-5409698-0-0	
REF		X-Y CO-ORDINATE HOLE LOCATION	X-CO-5409698-0-4	
REF		CIRCUIT SCHEMATIC	C-CS-5409698-0-1	
QTY.	REF DESIGNATION	DESCRIPTION	PART NO.	ITEM

PARTS LIST

FIRST USED ON OPT/MOD	
RK Ø5	
ETCH BOARD REV	E

DEC NO.	EIA NO.	DEC NO.	EIA NO.

SEMICONNECTOR CONVERSION CHART

NEST PRODUCT ASSY	D-UA-RK-Ø5-0-0	
SCALE	2/1	
SHEET	1 OF 1	

[redacted] EQUIPMENT CORPORATION.

SCALE RK7-2

CONTROL PANEL (RKØ5)

E IA 5409698-0-0 F

IC TYPE	GND	+5V
GND AND 5V ARE USUALLY PIN 7 AND 14 RESPECTIVELY. EXCEPTIONS ARE SHOWN ABOVE		

IC PIN LOCATIONS

FROM NO	WIRE	FROM PT	TO PT

JUMPER LIST

F	5-31-72		
E	11-17-71		
D	8-26-71		
C	8-14-71		
B	7-21-71		
A	7-14-71		

5409698-0-0	F	A

This drawing and specifications, herein, are the property of Digital Equipment Corporation and shall not be reproduced or copied or used in whole or in part as the basis for the manufacture or sale of items without written permission.

NOTE:
1. RELAY CONTACTS ARE SHOWN IN THE DE-ENERGIZED POSITIONS.
2. SAFETY RELAY L AND BLOWER MTR RELAY DR ARE THE SAME SIGNAL.
3. SPINDLE MOTOR RELAY L AND DISK RELAY DR ARE THE SAME SIGNAL.
4. THIS MODULE MUST BE UL APPROVED

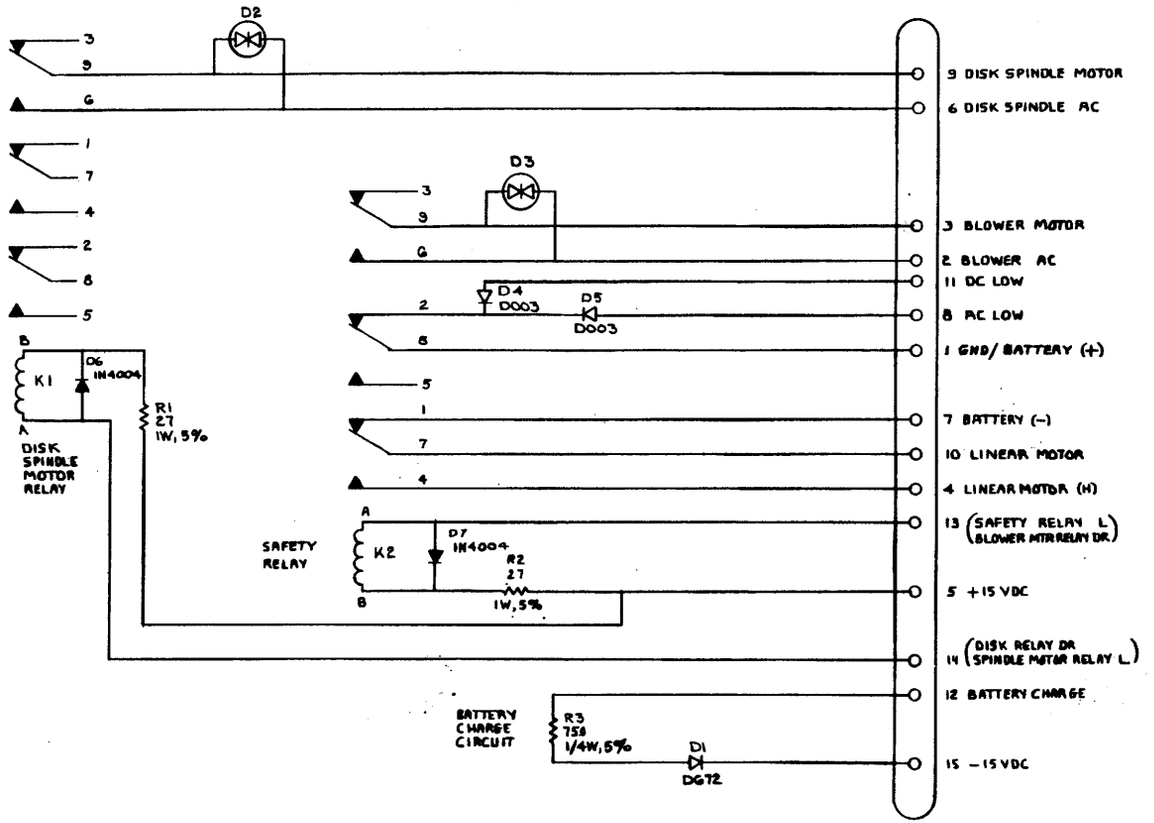

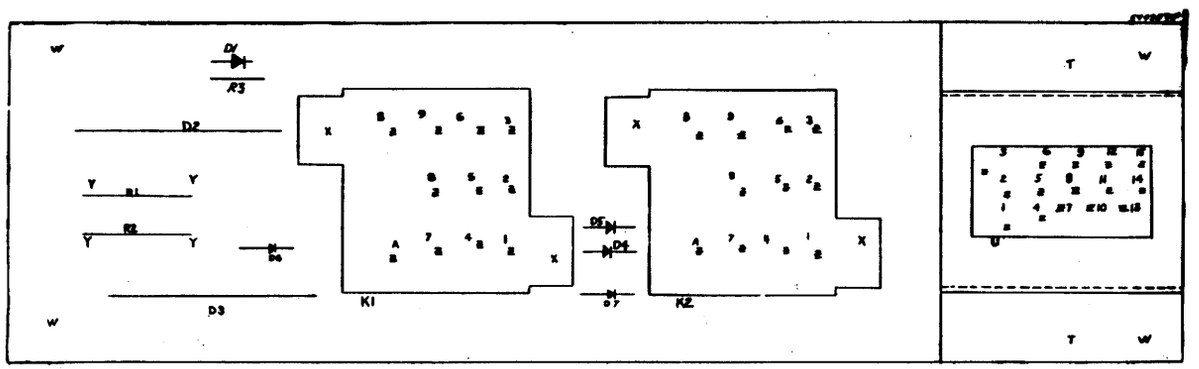

QTY	REF DESIGNATION	DESCRIPTION	PART NO.	ITEM NO.
		PARTS LIST		
ETCH BOARD REV	F			

D003	IN994		
D672	IN3653		
DEC NO.	EIA NO.	DEC NO.	EIA NO.

SEMICONDUCTOR CONVERSION CHART

REV	CHANGE NO.	CHK	REVISIONS
E	5409574-0001		
	1340574-000		
H	5409574-00003		

DRN. Roger J Doucette DATE 12-9-71
CHK'D. DATE 12-15-71
ENG. DATE 12 Jan 72
PROJ. ENG. DATE 12 Jan 72
PROD. DATE
NEXT HIGHER ASSY
SCALE
SHEET 1 OF 1

digital EQUIPMENT CORPORATION MAYNARD, MASSACHUSETTS

TITLE DEC PACK MOTOR RELAYS

SIZE D CODE CS NUMBER 5409574-0-1 REV. H

DIST.

DEC FORM NO.

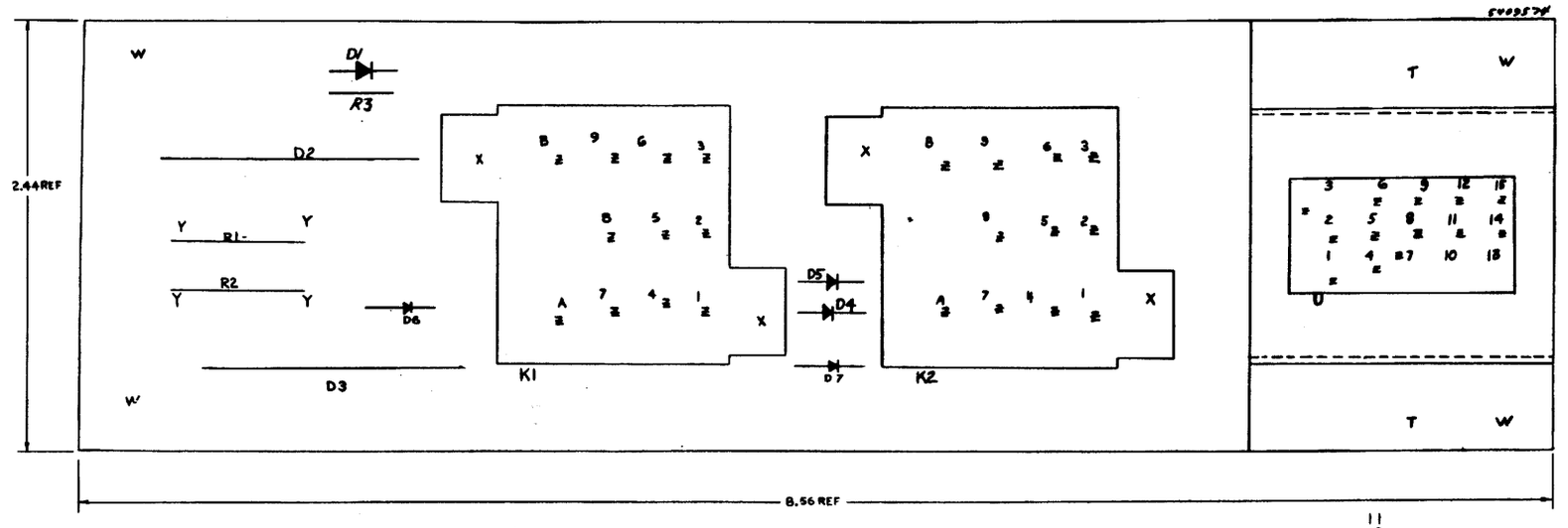

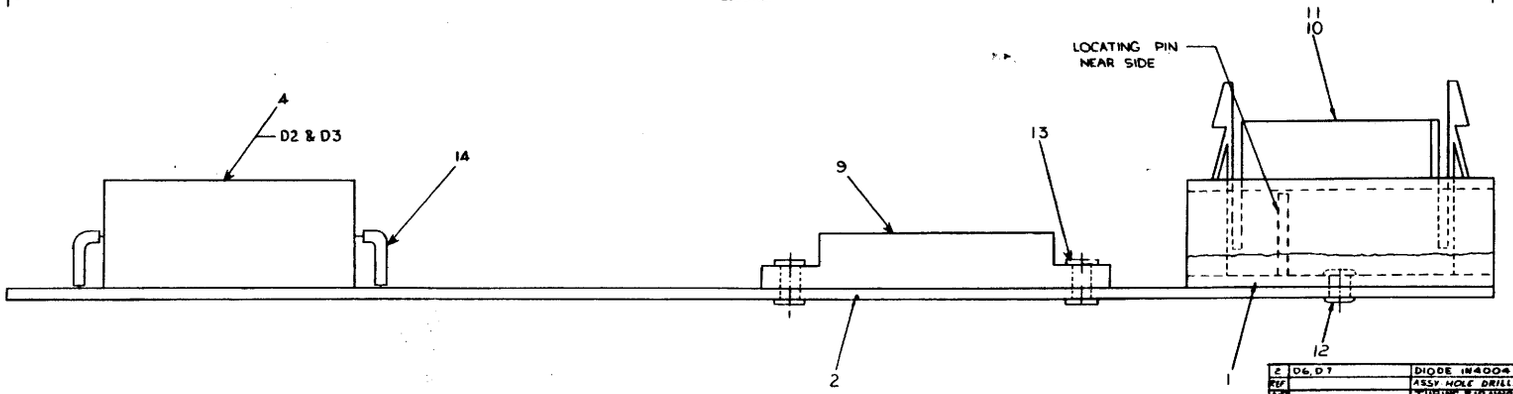

REF				
2	D6, D7	DIODE 1N4004	1105796	18
REF		ASSY HOLE DRILLING LAYOUT	D-M3095740-03/3	
AR		TUBING #18 AWG TEFLON TYP	5107278-11	14
4		EYELET 65-4-5	9006746	13
2		EYELET 121 ODX 2/9/16	9006732	12
15		PINS FOR MATE-N-LOCK	1209456-01	11
1		15 PIN MATE-N-LOCK	1208350-15	10
2		RELAY SOCKET	1210684	9
2	K1 K2	RELAY GP 3PDT 5AD1000	1210683	8
2	R1 R2	RESISTOR 27 1W 5%	1501316	7
1	R3	RESISTOR 750 1/4W 5%	1101401	6
1	D1	DIODE D6.72	1108278	5
2	D2, D3	ARC SUPPRES RS203 F484	1100106	4
2	D4, D5	DIODE GER D003	1100100	3
		ETCHED CIRCUIT BOARD	5009373	2
REF		MODULE ECO HISTORY	D-M3095740-04	
1		BRACKET MOTOR RELAY	D-M3095740-02	1
REF		X-Y COORD HOLE LOCAT	D-M3095740-01	
REF		CIRCUIT SCHEMATIC	D-M3095740-00	
QTY.	REF DESIGNATION	DESCRIPTION	PART NO.	ITEM

PARTS LIST

ETCH BOARD REV F

CAUTION
CHANGE COULD AFFECT U.L. LISTING

FIRST USED ON
RK05

D-672	1N3653
D-Ø03	1N994
DEC. NO.	EIA NO.

SEMICONDUCTOR CONVERSION CHART

IC TYPE	GND	+5V
GND AND 5V ARE NORMALLY PIN 7 AND 14 UNEXCEPTIONAL EXCEPTIONS ARE STATED ABOVE		

IC PIN LOCATIONS

ITEM NO	AWG	FROM PT	TO PT

JUMPER LIST

DRAWN		
CHECKED		
ENGR		
MFG		
QA		
APPROVED		

[redacted] EQUIPMENT CORPORATION.

TITLE
DECPACK
MOTOR RELAYS

D-UA-RK05-0-0

SCALE 4:1

SHEET OF

E IA 5409574-0-0

REV H

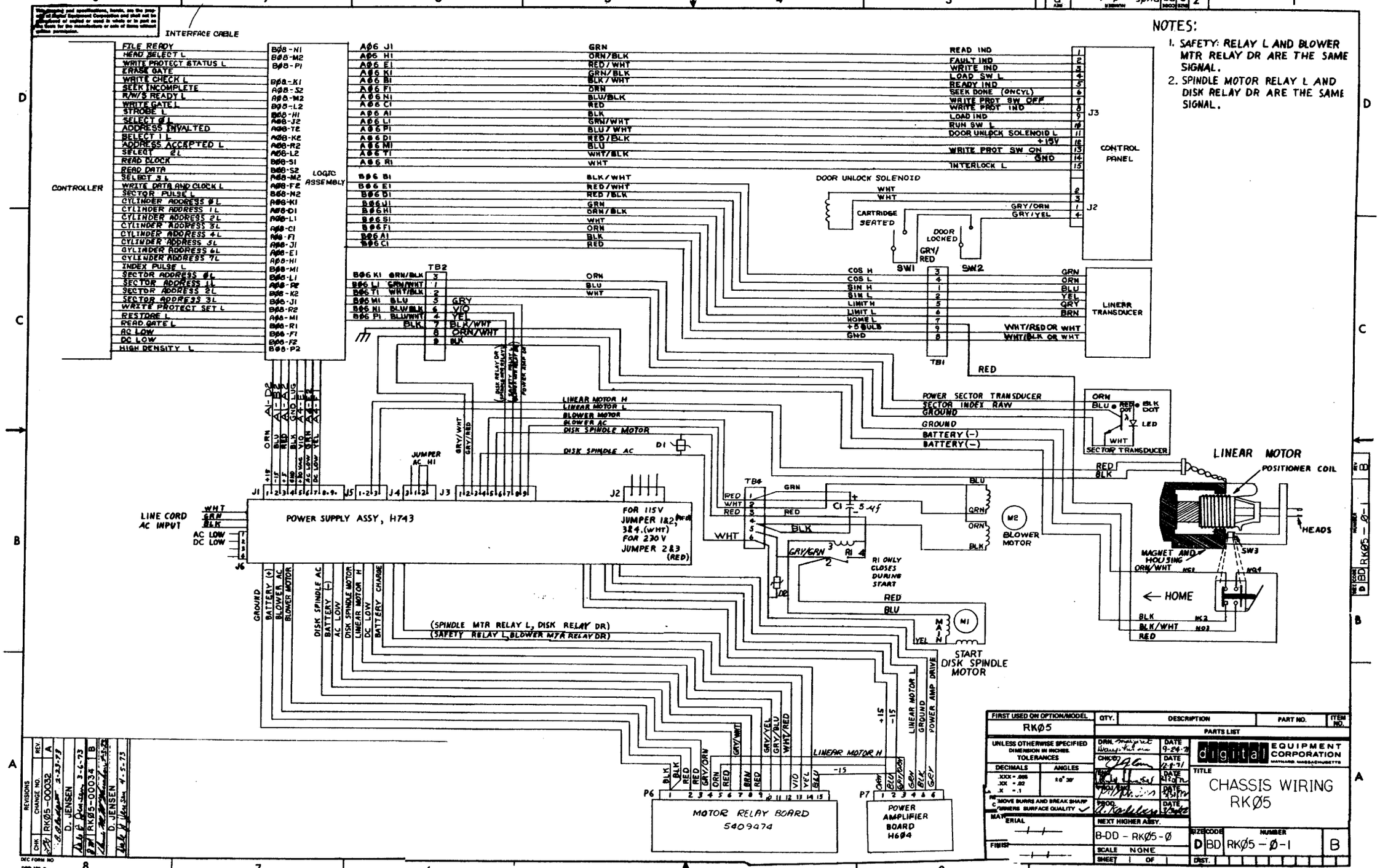
NOTES:
1. SAFETY RELAY L AND BLOWER MTR RELAY DR ARE THE SAME SIGNAL.
2. SPINDLE MOTOR RELAY L AND DISK RELAY DR ARE THE SAME SIGNAL.
INTERFACE CABLE
CONTROLLER
LOGIC ASSEMBLY
CONTROL PANEL
LINEAR TRANSDUCER
DOOR UNLOCK SOLENOID
CARTRIDGE SEATED
DOOR LOCKED
SW1
SW2
SECTOR TRANSDUCER
LINEAR MOTOR
POSITIONER COIL
HEADS
MAGNET AND HOUSING
HOME
BLOWER MOTOR
POWER SUPPLY ASSY, H743
LINE CORD AC INPUT
FOR 115V JUMPER 1&2, 3&4 (WHT)
FOR 230V JUMPER 2&3 (RED)
R1 ONLY CLOSES DURING START
START DISK SPINDLE MOTOR
(SPINDLE MTR RELAY L, DISK RELAY DR)
(SAFETY RELAY L, BLOWER MTR RELAY DR)
MOTOR RELAY BOARD 5409474
POWER AMPLIFIER BOARD H604
FIRST USED ON OPTION/MODEL
RKØ5
PARTS LIST
QTY. DESCRIPTION PART NO. ITEM NO.
UNLESS OTHERWISE SPECIFIED DIMENSION IN INCHES TOLERANCES
DECIMALS ANGLES
REMOVE BURRS AND BREAK SHARP CORNERS SURFACE QUALITY
MATERIAL
FINISH
NEXT HIGHER ASSY. B-DD - RKØ5-Ø
SCALE NONE
SHEET 1 OF
DRN. DATE 9-24-71
CHK'D DATE 12-8-71
ENGR DATE
PROD. DATE
digital EQUIPMENT CORPORATION MAYNARD, MASSACHUSETTS
TITLE CHASSIS WIRING RKØ5
SIZE D CODE BD NUMBER RKØ5-Ø-1 B
DIST.
REVISIONS
CHK CHANGE NO. REV.
RKØ5-00032 A 3-23-73 D. JENSEN
RKØ5-00034 B 3-6-73 D. JENSEN 4-5-73
DEC FORM NO DRB 102-B

DIGITAL EQUIPMENT CORPORATION
MAYNARD, MASSACHUSETTS

ACCESSORY LIST

MADE BY G. Schneider DATE	CHECKED DATE 8/17/72	SECTION
ENG DATE 8/17/72	PROD DATE 8/17/72	ISSUED SECT.

LEGEND
- D DOCUMENT
- DN DOCUMENT CHANGE NOTICE
- PA PAPER TAPE ASCII
- PB PAPER TAPE BINARY
- PM PAPER TAPE READ-IN-MODE

ITEM NO.	DWG NO./PART NO.	DESCRIPTION	QUANTITY/VARIATION: RK11 RK05's for all	RK8E RK05's for all						KIT CHECK BY ____ DATE ____	INSTALLATION CHECK BY ____ DATE ____
1	RK05-0	Customer Print Set (B-DD-RK05-0 Sheet one only)	1	1							
~~2~~	~~DEC-RKØ5-IPR-1~~	~~ILLUSTRATED PARTS BREAK DOWN FOR RKØ5~~	~~1~~	~~1~~							
3	DEC-00-RKØ5JF-DA	Maintenance Manual	1	1							
*** 4	BC 11A-Ø8	Unibus Cable 8 feet	1	1							
5	2200007	Head Cleaning Kit	1	1							
6	3010350-00	Disk Cartridge 12 Sector	1	0							
7	3010350-02	Disk Cartridge 16 Sector	0	1							
8*	A-AD-7009276-0-0	Mounting Hardware KIT	1	1							
9*	1209152-0-2 REF	Slide Chassis (Use set that was issued to Assy Line)	1	1							
	NOTE: The following items are additionally required when unit is shipped in a rack.										
10	749691-1	Shipping Bracket (Left Hand)	1	1							
11	749691-2	Shipping Bracket (Right Hand)	1	1							
12**	3611382	Drive Identification Numbers	1	1							
	*NOTE: If unit is shipped in a rack, Items 8 and 9 are mounted to the rack.										
	**NOTE: Attach the drive identification number set to the instruction sheet #DEC-16-(379)-1094-N573 using transparent adhesive tape. Insert sheet behind front cover of maintenance manual										
	*** NOTE: MAXIMUM TOTAL UNIBUS CABLE LENGTH = 5Ø FEET										

TITLE	ASSY. NO.	SIZE	CODE	NUMBER	REV.	ECO NO
DECpack Assembly	SHEET 1 OF 1	A	AL	RK05-0-17	F	RKØ5J 00006

DIST.

DEC 16-(325)-1076-N172 DRA 121

digital EQUIPMENT CORPORATION
MAYNARD, MASSACHUSETTS

DRAWING DIRECTORY

CUSTOMER PRINT SET INDEX

THIS IS PRINT SET

	SEQUENCE
DRAWING DIRECTORY	B-DD-H743-Ø SHEET #1 ONLY
CIRCUIT SCHEMATIC	D-CS-H743-Ø-1
±5V REGULATOR	E-1A-5409503-0-0
CIRCUIT SCHEMATIC	D-CS-5409503-0-1
±15V REGULATOR	E-1A-5409484-0-0
CIRCUIT SCHEMATIC	D-CS-5409484-0-1

MFG PRINTS

POWER SUPPLY	E-UA-H743-0-0
POWER SUPPLY (PL)	A-PL-H743-0-0
DRAWING DIRECTORY	B-DD-H743-Ø
PACKAGING INSTRUCTION	A-PI-3700130-0-0

UNIT VARIATIONS

VARIATION	TITLE	PRINT SET TYPE
H743-AA	POWER SUPPLY 115V	X
H743-AB	POWER SUPPLY 230V	X

REVISIONS

REV	CHG. NO.	DATE
A	RKO5-19	8/72
B	H743-1	8/72
C	H743-2	2-14-73
D	H743-3	
E	H743-4	
F	H743-5	
H	H743-6	2-74
J	H743-7	6-74
K	H743-10	3-75
L	H743-11	5-75
M	H743-12	6-75
N	H743-13	8-75
P	H743-14	9-75
R	H743-15	1-76
S	H743-16	4-76
T	H743-17	12-76
U	H743-18	2-76
V	H743-19	1-78

USED ON OPTION/MODEL	
RKØ5	

DRN. J. FLEMING	DATE 12/16/71	TITLE POWER SUPPLY (H743)
CHK'D.	DATE 4-7-72	
PROJ ENG.	DATE 4/26/72	
PROD.	DATE 4/19/72	SIZE B / CODE DD / NUMBER H743-Ø / REV V
FIELD SERV.	DATE	
SHEET 1 OF 3		DIST 6

DRB 106

DEC 16—(3251—1062—1—N871

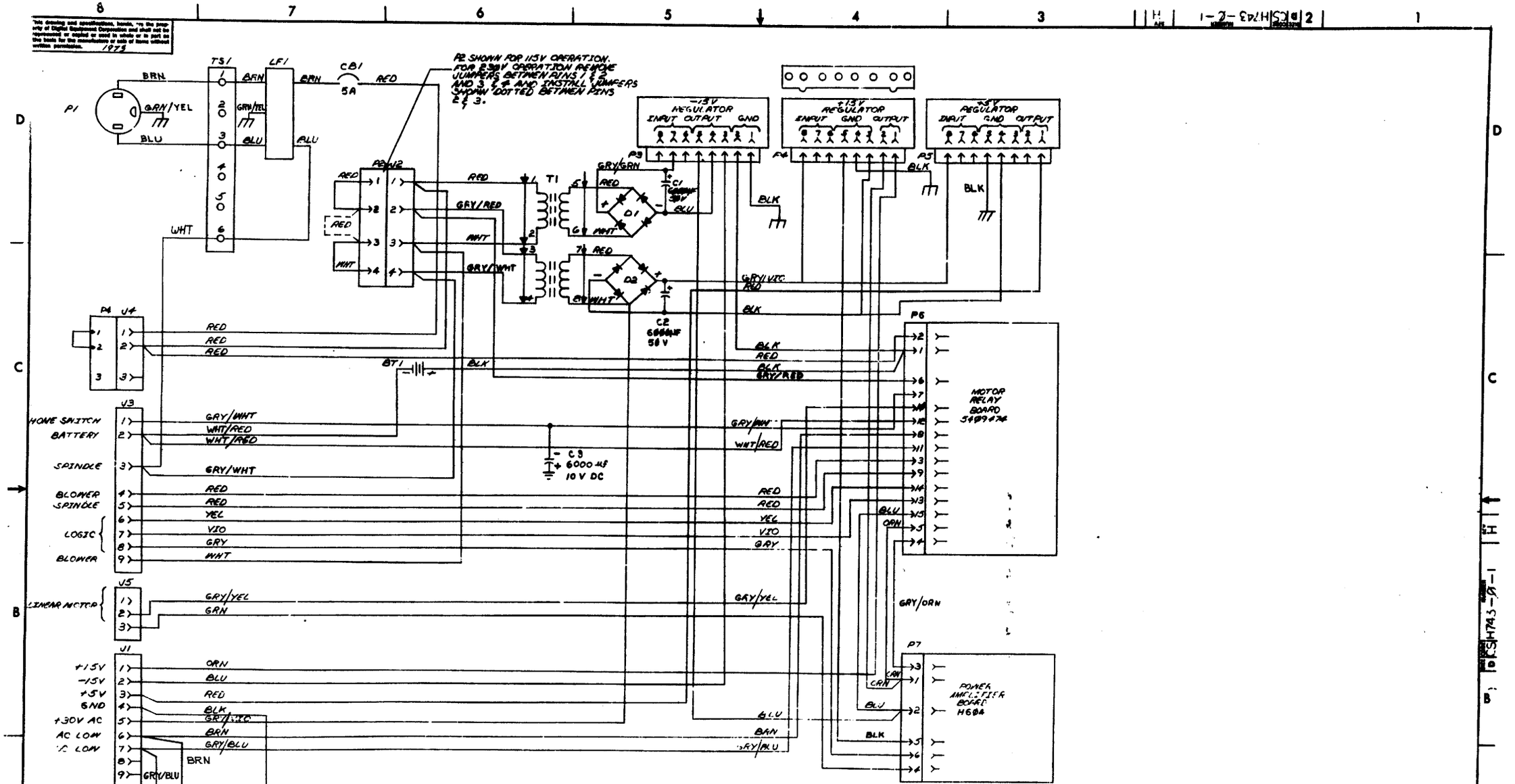

QTY	REF DESIGNATION	DESCRIPTION	PART NO.	ITEM NO.

PARTS LIST

ETCH BOARD REV

FIRST USED ON OPTION/MODEL: H743

REV	CHANGE NO.	REVISIONS	CHK
A	[illegible]	[illegible]	[illegible]
B	H743-00011	[illegible]	[illegible]
C	H743-00002	[illegible]	[illegible]
D	H743-00004	[illegible]	[illegible]
E	H743-00008	[illegible]	[illegible]
F	H743-00[illegible]	[illegible]	[illegible]
H	H743-00015	[illegible]	[illegible]

DEC NO | EIA NO. | DEC NO. | EIA NO.

SEMICONDUCTOR CONVERSION CHART

DRN. [illegible] DATE [illegible]
CHK'D. [illegible] DATE 11-8-71
ENG. [illegible] DATE [illegible]
PROJ. ENGR. [illegible] DATE [illegible]
CHK'D. [illegible] DATE [illegible]
APPD. [illegible] DATE [illegible]

NEXT HIGHER ASSY: B-DD-H743-0

SCALE NONE

SHEET 1 OF 1

[redacted] EQUIPMENT CORPORATION
MAYNARD, MASSACHUSETTS

TITLE: CIRCUIT SCHEMATIC H743

DOCUMENT CODE: DCS | NUMBER: H743-0-1 | REV. H

DWT.

DEC FORM NO. DRD-135

The drawing and specifications, herein, are the prop. of Digital Equipment Corporation and shall not be reproduced or copied or used in whole or in part as basis for the manufacture or sale of items without the permission. 1975

WIRE TABLE

ITEM NO.	DESCRIPTION AWG	COLOR	LENGTH IN. ± 1/8"	STRIP LENGTH-X	STRIP LENGTH-Y	CONNECTIONS FROM	TO
42	—	BLK	2 1/8	—	1/2"	L1	CATHODE D2 — LUG
42	—	BLK	2 1/8	—	1/2"	L1	R21-T2
68	18	VIO	2 1/4	1/2"	1/2"	Q5-C	CATHODE D2 — LUG
66		GRN	4 1/4	1/2"	1/2"	D2 ANODE	ANODE D3 — LUG
65		YEL	4 1/8	1/2"	1/2"	D3 CATHODE	R21-T1
70		WHT	4 3/8	1/2"	1/2"	SPLIT LUG #1	Q5-E
69		GRY	5 1/4	1/2"	1/2"	SPLIT LUG #2	Q5-B
68		VIO	5 1/4	1/2"	1/2"	SPLIT LUG #3	Q5-C
67		BLU	8	1/2"	1/2"	SPLIT LUG #4	R21-T2
66		GRN	5 3/4	1/2"	1/2"	SPLIT LUG #6	ANODE D3 — LUG
65	18	YEL	8 1/4	1/2"	1/2"	SPLIT LUG #8	R21-T1

SEE NOTE #5

EXTERNAL COMPONENTS

ITEM NO.	LENGHT	DESCRIPTION	POL	CONNECTIONS FROM	TO	POL
45	NOTE #2	RES. 100 Ω W 5%		Q5-E	Q5-B	
46	NOTE #3	CAP 10UF 50V 10%	+	Q5-E	D3 ANODE — LUG	—

NOTES:

1. R13 IS USED FOR OUTPUT VOLTAGE ADJUSTMENT. R7 IS USED FOR OUTPUT CURRENT ADJUSTMENT.
2. CUT LEADS OF RES. (R22) SO THERE IS 3/8" OF A LEAD LEFT ON BOTH ENDS. —[R22]— ⊣ 3/8 ⊢
3. CUT LEADS OF CAP. (C11) SO THERE IS 1/2" OF A LEAD LEFT ON BOTH ENDS. —[C11]— ⊣ 1/2" ⊢
4. THERMAL COMPOUND (ITEM 31) IS TO BE APPLIED TO BOTH SIDES OF ALL THERMAL INSULATORS (ITEM 49,50 & 63). BOTH SIDES OF EACH INSULATOR SHOULD BE COVERED, LEAVING NO VOIDS WHEN INSTALLED. CARE MUST BE EXERCISED SO THAT NO EXTRA COMPOUND INTERFERES WITH ANY ELECTRICAL CONNECTION MADE TO ANY DIVICE.
5. WHEN ASSEMBLING THE WIRES FROM THE CIRCUIT BOARD TO THE HEAT SINK, PLACE THE MODULE AGAINST THE HEAT SINK, WIRE AS SHOWN BY THE WIRE LIST AND MAKE A SERVICE LOOP AT THE CONNECTIONS ON THE HEAT SINK TO TAKE UP ANY EXCESS WIRE THAT MIGHT BE AVAILABLE.

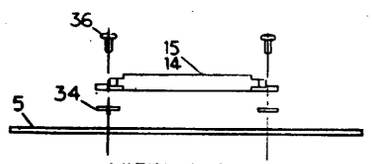

VIEW A-A
SCALE: NONE

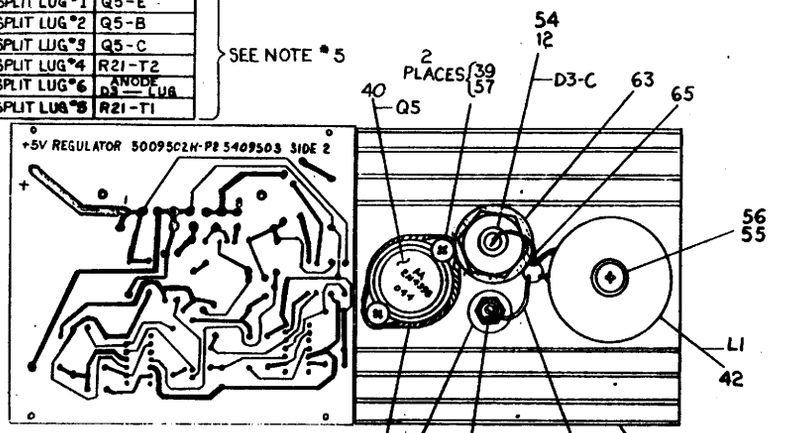

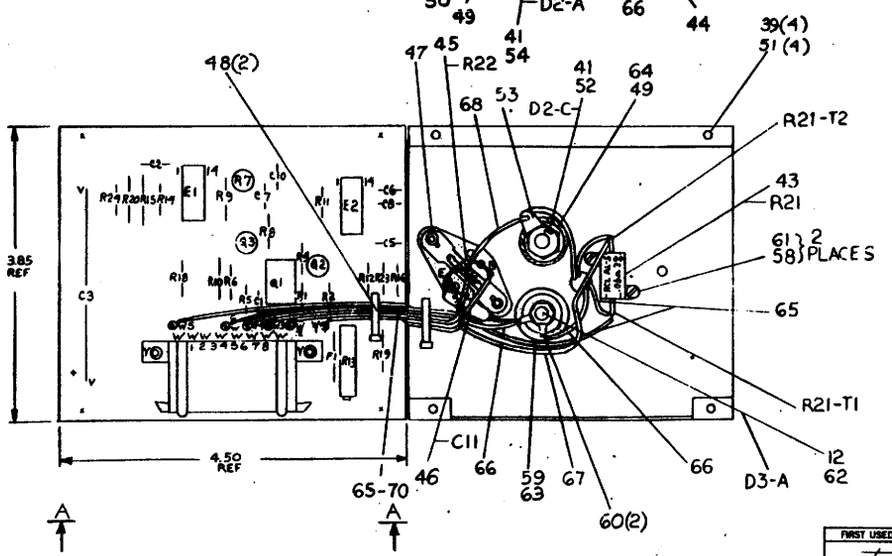

IC TYPE	GND	+5V
GND AND 5V ARE USUALLY PIN 7 AND 14 RESPECTIVELY EXCEPTIONS ARE STATED ABOVE		

IC PIN LOCATIONS

FIRST USED ON OPTION MODEL	
—	—

DEC NO.	EIA NO.
1N 3889	SAME
2N 4398	—
D4536	—
2N 4441	—
DEC 6534 D	MPS 6534
1N 752 A	SAME

SEMICONDUCTOR CONVERSION CHART

REV	CHK	CHANGE NO.	REVISIONS
R		5409503-0003	REVISED & REDRAWN

J. RINALDI 11/4/73

QTY	REF DESIGNATION	DESCRIPTION	PART NO.	ITEM NO.

PARTS LIST

ETCH BOARD REV H

DRN.	G. MARINI	DATE	8-21-71
CHK'D.	J. FLEMING	DATE	8-27-71
ENG.	P.S. VENDSON	DATE	8-27-71
PROJ. ENG.	P.S. VENDSON	DATE	8-27-71
PROD.	P. FAZIO	DATE	8-25-71
NEXT HIGHER ASSY	—		
SCALE	NONE		
SHEET	1 OF 1		

[redacted] EQUIPMENT CORPORATION
MAYNARD, MASSACHUSETTS

TITLE: + 5 VOLT POWER REGULATOR

SIZE D | CODE IA | NUMBER 5409503-0-0 | REV. R

THIS SCHEMATIC IS FURNISHED ONLY FOR TEST AND MAINTENANCE PURPOSES. THE
COPY
COPYRIGHT 1971 BY DIGITAL EQUIPMENT CORPORATION

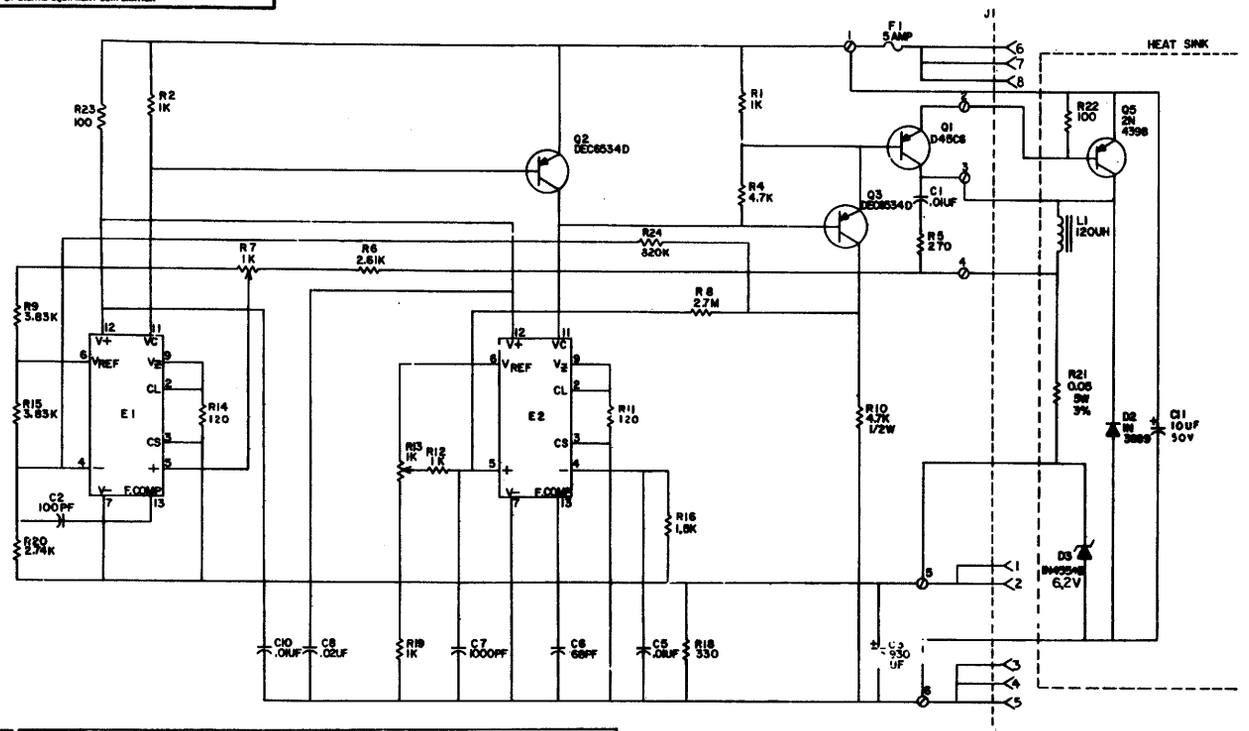

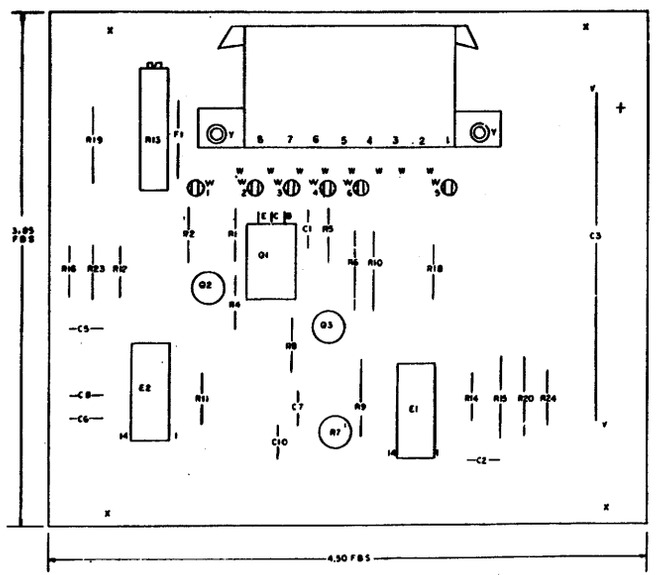

QTY	REF DESIGNATION	DESCRIPTION	PART NO.	ITEM NO.
A/R		WIRE #18 AWG STRD (WHT.)	9107360-99	70
A/R		WIRE #18 AWG STRD (GRY.)	9107360-88	69
A/R		WIRE #18 AWG STRD (VIO.)	9107360-77	68
A/R		WIRE #18 AWG STRD (BLU.)	9107360-66	67
A/R		WIRE #18 AWG STRD (GRN.)	9107360-55	66
A/R		WIRE #18 AWG STRD (YEL.)	9107360-44	65
1		3/16 FLAT WASHER	9006666	64
2		THERMAL INSULATOR	9009678	63
1		NUT, HEX 1/4 X 28	9008063	62
2		WASHER, INT TOOTH LOCK #2	9006631	61
2		SOLDER LUG	9006764	60
1		1/4 FLAT WASHER	9006676	59
2		SCR BINDING HD 2-56 X 3/16 SST	9006000-4	58
2		SCR PHIL PAN HD 6-32 X 5/8 SST	9006025-1	57
1		SCR PHIL TRUSS HD 10-32 X 1 SST	9006077-3	56
1		WASHER INT TOOTH LOCK #10	9006635	55
2		BUSHING	9008441	54
1		SOLDER LUG	9008150	53
1		NUT, HEX #10-32	9006564	52
4		SCR PHIL PAN HD #6-20 X 3/8 ST	9008407	51
1		THERMAL INSULATOR	9008419	50
2		THERMAL INSULATOR	9008424	49
2		TIE WRAPS	9007031	48
1		TRANSISTOR SOCKET	1210130	47
1	C11	CAP 10UF 50V	1000070	46
2	R22, R23	RES 100 1/4W 5%	1300229	45
1		HEAT SINK	D-IA-5309543-0-0	44
1	R21	RES 0.05 5W 3%	1310507	43
1	L1	CHOKE 120 UH	1610573	42
1	D2	DIODE IN3889	1110481	41
1	Q5	TRANSISTOR 2N4398	1505870	40
6		WASHER INT TOOTH #6	9006633	39
2	R11, R14	RES 120 1/4W 5%	1300247	38
1	R16	RES 1.5K 1/4W 5%	1300391	37
2		EYELETS	9006732	36
6		SPLIT LUGS	9006735	35
2		WASHER NYLON	9006707	34
2	E1, E2	IC 723C DIP REGULATOR	1910415	33
1	Q1	TRANSISTOR D45C6 C.E.	1510414	32
A/R		THERMAL COMPOUND	9008268	31
2	Q2, Q3	TRANSISTOR DEC6534D	1503409-00	30
1	R8	RES 2.7M 1/4W 5%	1309690	29
2	R9, R15	RES 3.83K 1/8W 1%	1309413	28
1	R7	RES 1K 1/2W 20%	1309150-3	27
1	R13	RES 1K 10W 76PR	1309143-07	26
1	R20	RES 2.74K 1/8W 1% MF	1309868	25
1	R6	RES 2.61K 1/8W 1% MF	1303303	24
1	R19	RES 1K 1/8W 1% MF	1303114	23
				22
1	R10	RES 4.7K 1/2W 5%	1300445	21
1	R5	RES 270 1/4W 5%	1301372	20
1	R4	RES 4.7K 1/4W 5%	1300447	19
3	R1, R2, R12	RES 1K 1/4W 5%	1300365	18
1	R18	RES 330 1/4W 5%	1300235	17
1	R24	RES 820K 1/4W 10%	1303187	16
8		CONNECTOR PIN	1209456	15
1	J1	CONN 8 PIN AMP	1209340-00	14
1	F1	FUSE 5 AMPS	1209070	13
1	D3	DIODE IN4554B 6.2V	1112122	12
1	C8	CAP .02UF 100V -0 +20% DISC	1000004	11
1	C3	CAP 930UF 30V -10 +75% ELEC.	1010509	10
3	C1, C5, C10	CAP .01UF 100V 20% DISC	1001610	9
1	C7	CAP 1000PF 100V 5% MICA	1000042	8
1	C2	CAP 100PF 100V 5% DM	1000016	7
1	C6	CAP 68PF 100V 5% DM	1000014	6
1		ETCH CIRCUIT BOARD	5009502	5
		MODULE ECO HISTORY	B-MH-5409503-0-6	4
		ASSY/DRILLING HOLE LAYOUT	D-AH-5409503-0-5	3
		X-Y COORDINATE HOLE LOCATION	K-CO-5409503-0-4	2
		+5V REGULATOR	D-IA-5409503-0-0	1

PARTS LIST

TRANSISTOR & DIODE CONVERSION CHART

[redacted] EQUIPMENT CORPORATION MAYNARD, MASSACHUSETTS

TITLE +5 VOLT REGULATOR

SIZE D CODE CS NUMBER 5409503-0-1 REV R

PRINTED CIRCUIT REV.

Drawing and specifications, herein, are the property of Digital Equipment Corporation and shall not be loaned or copied or used in whole or in part as base for the manufacture or sale of items without written permission. 1975

WIRE TABLE

ITEM NO.	DESCRIPTION AWG	DESCRIPTION COLOR	LENGTH INCHES +-1/8	STRIP LENGTH X	STRIP LENGTH Y	CONNECTIONS FROM	CONNECTIONS TO
43	—	BLK	2 1/8	—	1/2	L1	D3-LUG (CATHODE)
43	—	BLK	2 1/8	—	1/2	L1	TS-2
65	18	BLU	2 1/4	1/2	1/2	Q4-C	D3-LUG (CATHODE)
67	18	GRY	3 5/8	1/2	1/2	Q4-E	R24-T2
64	18	GRN	4 1/2	1/2	1/2	D3-ANODE	TS-1
68	18	WHT	5 7/8	1/2	1/2	SPLIT LUG #1	R24-T1
67	18	GRY	4 7/8	1/2	1/2	#2	Q4-E
66	18	VIO	5 1/8	1/2	1/2	#3	Q4-B
65	18	BLU	5 1/8	1/2	1/2	#4	Q4-C
64	18	GRN	5 1/2	1/2	1/2	#6	TS-1
63	18	YEL	6 7/8	1/2	1/2	SPLIT LUG #5	TS-2

SEE NOTE 5

EXTERNAL COMPONENTS

ITEM NO.	LENGTH	DESCRIPTION	POL	CONNECTIONS FROM	CONNECTIONS TO	POL
45	SEE NOTE 2	RES 100Ω 1/4W 5%		Q4-E	Q4-B	
47	SEE NOTE 3	CAP 10 UF 50V 10%	+	Q4-E	TS-1	—

NOTES:

1. R17 IS USED FOR OUTPUT VOLTAGE ADJUSTMENT. R2 IS USED FOR OUTPUT POWER ADJUSTMENT.
2. CUT LEADS OF RES. (R25) SO THERE IS 3/8" OF A LEAD LEFT AT BOTH ENDS. (3/8, R25)
3. CUT LEADS OF CAP. (C9) SO THERE IS 1/2 OF A LEAD LEFT AT BOTH ENDS. (1/2, C9)
4. THERMAL COMPOUND (ITEM #39) IS TO BE APPLIED TO BOTH SIDES OF ALL THERMAL INSULATORS (ITEM #50+51) BOTH SIDES OF EACH INSULATOR SHOULD BE COMPLETELY COVERED, LEAVING NO VOIDS WHEN INSTALLED. CARE MUST BE EXERCISED SO THAT NO EXTRA COMPOUND INTERFERES WITH ANY ELECTRICAL CONNECTION MADE TO ANY DEVICE.
5. WHEN ASSEMBLING THE WIRES FROM THE CIRCUIT BOARD TO THE HEAT SINK, PLACE THE MODULE AGAINST THE HEAT SINK. WIRE AS SHOWN BY THE WIRE LIST AND MAKE A SERVICE LOOP AT THE CONNECTIONS ON THE HEAT SINK TO TAKE UP ANY EXCESS WIRE THAT MIGHT BE AVAILABLE.

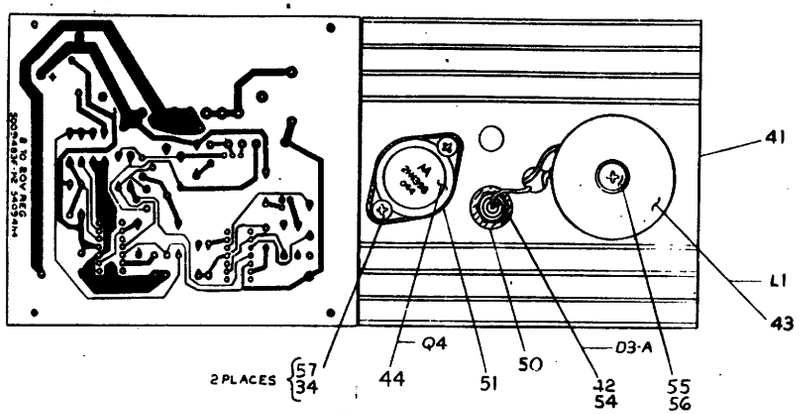

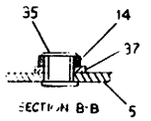

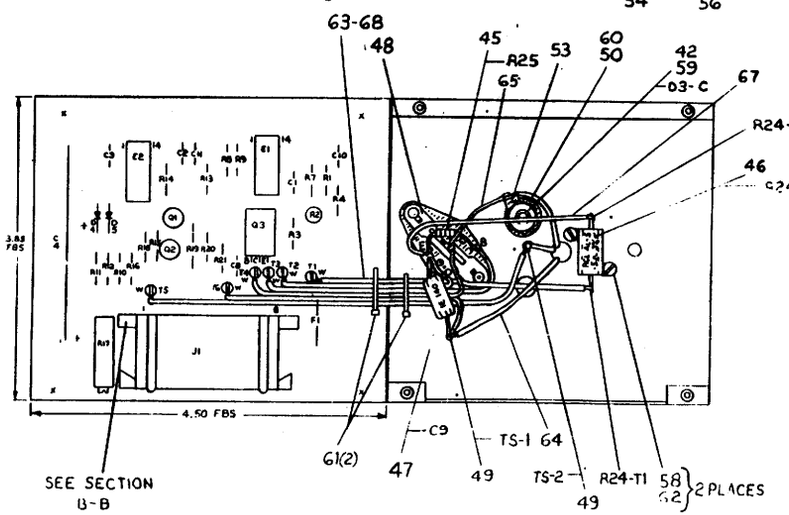

QTY	REF DESIGNATION	DESCRIPTION	PART NO.	ITEM NO.

PARTS LIST

ETCH BOARD REV

REV	CHANGE NO.	REVISIONS
K	540984-0-0-0-7	REVISED & REDRAWN

J. RINALDIS

DEC NO.	EIA NO.	DEC NO.	EIA NO.

SEMICONDUCTOR CONVERSION CHART

DRN. T. QUILLIN DATE 7-SEP-71
CHK'D. J. FLEMING DATE 8-SEP-71
ENG. P. SVENDSEN DATE 8-SEP-71
PROJ. ENG. P. SVENDSEN DATE 8-SEP-71
PROD. P. FAZIO DATE 9-OCT-71
NEXT HIGHER ASSY D-UA-H737-0-0
SCALE NONE
SHEET 1 OF 1

[redacted] EQUIPMENT CORPORATION MAYNARD, MASSACHUSETTS

TITLE 8 TO 20V REGULATOR

SIZE/CODE D IA NUMBER 5409484-0-0 REV. K

DIST.

DRAWING 40-107 15969

DE FORM NO DE-135

D IA 5409484-0-0 REV K

THIS DRAWING AND SPECIFICATIONS, HEREIN, ARE THE PROPERTY OF DIGITAL EQUIPMENT CORPORATION AND SHALL NOT BE REPRODUCED OR COPIED OR USED IN WHOLE OR IN PART AS THE BASIS FOR THE MANUFACTURE OR SALE OF ITEMS WITHOUT WRITTEN PERMISSION.
COPYRIGHT © DIGITAL EQUIPMENT CORPORATION

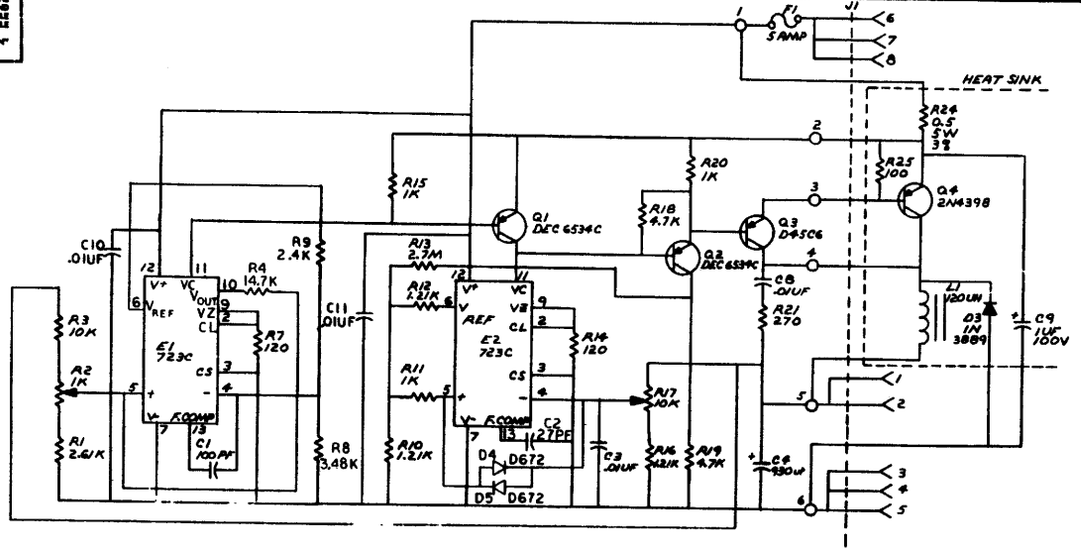

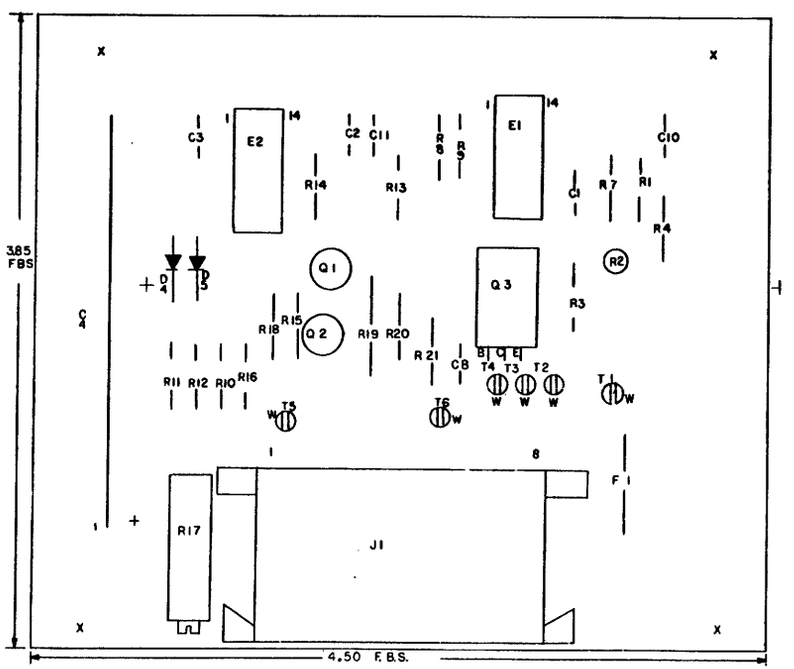

QTY	REF DESIGNATION	DESCRIPTION	PART NO.	
4		WASHER, LOCK SPRING	9007801	69
A/R		WIRE #18 AWG STRD (WHT)	9107360-99	68
A/R		WIRE #18 AWG STRD (GRY)	9107360-88	67
A/R		WIRE #18 AWG STRD (VIO)	9107360-77	66
A/R		WIRE #18 AWG STRD (BLU)	9107360-66	65
A/R		WIRE #18 AWG STRD (GRN)	9107360-55	64
A/R		WIRE #18 AWG STRD (YEL)	9107360-44	63
2		#2 INTERNAL LOCK WASHER	9006631	62
2		TIE WRAPS	9007031	61
1		WASHER FLAT 3/16	9006664	60
1		#10-32 HEX NUT	9006364	59
2		2/56 x 3/16" SCREW	9006000-4	58
2		6/32 x 3/8" PAN HD SCREW	9006023-1	57
1		10-32 x 1" TRUSS HD SCREW	9006077-3	56
1		#10 INTERNAL LOCK WASHER	9006635	55
1		BUSHING (DIODE)	9008441	54
1		SOLDER LUG	9008150	53
4		#6-20 x 3/8 SELF TAPPING SCREW	9008407-01	52
1		THERMAL INSULATOR	9008419	51
2		THERMAL INSULATOR	9008424	50
2	TS-1, TS-2	STAND OFF (STUD TYPE)	9009060	49
1		TRANSISTOR SOCKET	1210130	48
1	C9	CAP 1UF 100V	1005507	47
1	R24	RES. 0.5 3% 5W	1310508	46
1	R25	RES. 100 5% 1/4W	1300229	45
1	Q4	TRANSISTOR 2N4398	1505870	44
1	L1	120UH CHOKE	1610573	43
1	D3	DIODE 1N3889	1110491	42
1		HEAT SINK	D-IA-5409543-0-0	41
6		SPLIT LUGS	9006735	40
A/R		THERMAL COMPOUND	9008268	39
1	F1	FUSE 5 AMPS	1209070	38
2		WASHER NYLON	9006707	37
8		CONNECTOR PINS	1209456	36
2		EYELET	9006732	35
2		WASHER INT TOOTH #6	9006633	34
2	E1, 2	DIP REGULATOR 723C	1910415	33
1	Q3	TRANSISTOR D45C6	1510414	32
2	Q1, 2	TRANSISTOR DEC 6534C	1503409-02	31
				30
1	R21	RES. 270 1/4W 5%	1301372	29
1	R19	RES. 4.7K 1/2 W 5%	1300445	28
1	R18	RES. 4.7K 1/4W 5%	1300447	27
1	R17	RES. VARIABLE 10K 3/4 W 10%	1309743-10	26
1	R13	RES 2.7M 1/4W 5%	1309680	25
3	R11, 15, 20	RES 1K 1/4 W 5%	1300365	24
3	R10, 12, 16	RES 1.21K 1/8W 1% MF	1302871	23
1	R8	RES 3.48K 1/8W 1% MF	1305114	22
2	R7, 14	RES 120 1/4 W 5%	1300247	21
				20
1	R9	RES 2.4K 1/4W 5%	1303177	19
1	R4	RES 14.7K 1/8 W 1% MF	1302941	18
1	R3	RES 10K 1/8W 1% MF	1303312	17
1	R2	RES VARIABLE 1K 1/2 W	1309150-03	16
1	R1	RES 2.61K 1/8W 1% MF	1303303	15
1	J1	AMP 8 PIN CONNECTOR (MATE-LOC)	1209340-00	14
2	D4, D5	DIODE D672	1105275	13
				12
				11
				10
1	C4	CAP. 930UF 30V, -10+75 %	1010509	9
4	C3, 8, 10, 11	CAP. .01UF 100V 20% AXIAL	1001610	8
1	C2	CAP. 27 PF 100 V 5% MICA	1001739	7
1	C1	CAP. 100PF 100V 5% CM.	1000016	6
1		ETCHED CIRCUIT BOARD	5009483	5
		MODULE ECO HISTORY	B-MN-5409484-0-6	4
		ASSY DRILLING HOLE LAYOUT	D-MN-5409484-0-5	3
		X-Y COORDINATE HOLE LOCATION	K-CO-5409484-0-4	2
		8 TO 20 V REGULATOR	E-IA-5409484-0-0	1

REVISIONS				
CHK	CHANGE NO.	REV.		
87	00005	11	5409484-00006 J	5409484-00007 K
			7-19-75	7-15-75
			J. RINALDIS	J. RINALDIS
			7/21/75	7/21/75

CHK'D		3-11-75
ENG'D		3/13/75
MFG'D		4/3/75
APPD'D		1/1/75

TITLE: 8 TO 20V REGULATOR

SIZE: D | CODE: CS | NUMBER: 5409484-0-1 | REV.: K

SCALE | SHEET 1 OF 1 | DIST. F

DCS 5409484-0-1 K

RUN NAME	A/P	PIN NAME	ORDER PIN	BAY - ORDER	Q	DRAW OPT	RV RG Y	X	Z	REMARKS	NC LENGTH EXCEPTIONS FLAG	RUN NUMBER
+15VDC	H	A05D2		1-01 *			D05-9		1		0-4/8	1
+15VDC	H	A06D1		1-02 *			D05-9					1
+15VDC	H			1							0-4/8	1
+5VDC BULB	H	B06A1		1-01 *			D05-9		1		0-4/8	2
+5VDC BULB	H	B06A2		1-02 *			D05-9					2
+5VDC BULB	H			1							0-4/8	2
12B	H	A01M2		1-01 *			D05-1		1		2-5/8	3
12B	H	B03A1		1-02 *			D05-1					3
12B	H			1							2-5/8	3
AC LOW	H	A04R2		1-01 *			D05-8		1		2-7/8	4
AC LOW	H	B08F1		1-02 *			D05-8		2		1	4
AC LOW	H	B07F1		1-03 *			D05-8					4
AC LOW	H			1							3-7/8	4
ADDR ACCEPTED	L	A02S1		1-01 *			D05-5		1		1-2/8	5
ADDR ACCEPTED	L	A03N1		1-02 *			D05-5					5
ADDR ACCEPTED	L			1							1-2/8	5
ADDRESS INVALID	L	B02F1		1-01 *			D05-2		1		0-5/8	6
ADDRESS INVALID	L	B03F1		1-02 *			D05-2					6
ADDRESS INVALID	L			1							0-5/8	6
BLOWER MTR RELAY DR	H	A04A1		1-01 *			D05-9		1		5-5/8	7
BLOWER MTR RELAY DR	H	B06N1		1-02 *			D05-9					7
BLOWER MTR RELAY DR	H			1							5-5/8	7
BUS ADDR ACCEPTED	L	A02R1		1-01 *			D05-4		1		3-2/8	8
BUS ADDR ACCEPTED	L	A07R2		1-02 *			D05-4		2		1	8
BUS ADDR ACCEPTED	L	A08R2		1-03 *			D05-4					8
BUS ADDR ACCEPTED	L			1							4-2/8	8
BUS ADDR INVALID	L	A08T2		1-01 *			D05-4		2		1	9
BUS ADDR INVALID	L	A07T2		1-02 *			D05-4		1		4-1/8	9
BUS ADDR INVALID	L	B02A1		1-03 *			D05-4					9
BUS ADDR INVALID	L			1							5-1/8	9
BUS FILE READY	L	A04M1		1-01 *			D05-7		1		4-6/8	10
BUS FILE READY	L	B08N1		1-02 *			D05-7		2		1	10
BUS FILE READY	L	B07N1		1-03 *			D05-7					10
BUS FILE READY	L			1							5-6/8	10
BUS INDEX PUL	L	A02K1		1-01 *			D05-3		1		4-6/8	11
BUS INDEX PUL	L	B08M1		1-02 *			D05-3		2		1	11
BUS INDEX PUL	L	B07M1		1-03 *			D05-3					11
BUS INDEX PUL	L			1							5-6/8	11
BUS R/W/S READY	L	A02H1		1-01 *			D05-4		1		3-5/8	12
BUS R/W/S READY	L	A07H2		1-02 *			D05-4		2		1	12
BUS R/W/S READY	L	A08H2		1-03 *			D05-4					12
BUS R/W/S READY	L			1							4-5/8	12

RUN NAME	A/P	PIN NAME	ORDER PIN	BAY - ORDER	Q	DRAW OPT	RV RG Y	X	Z	REMARKS	NC LENGTH EXCEPTIONS FLAG	RUN NUMBER
BUS SECTOR ADDR	L	A02H1		1-01 *			D05-3		1		4-7/8	13
BUS SECTOR ADDR	L	B08L1		1-02 *			D05-3		2		1	13
BUS SECTOR ADDR	L	B07L1		1-03 *			D05-3					13
BUS SECTOR ADDR	L			1							5-7/8	13
BUS SECTOR ADDR 1	L	A02J1		1-01 *			D05-4		1		3-5/8	14
BUS SECTOR ADDR 1	L	A07P2		1-02 *			D05-4		2		1	14
BUS SECTOR ADDR 1	L	A08P2		1-03 *			D05-4					14
BUS SECTOR ADDR 1	L			1							4-5/8	14
BUS SECTOR ADDR 2	L	A02L1		1-01 *			D05-4		1		4-1/8	15
BUS SECTOR ADDR 2	L	B07K2		1-02 *					2		1	15
BUS SECTOR ADDR 2	L	B08K2		1-03 *			D05-4					15
BUS SECTOR ADDR 2	L			1							5-1/8	15
BUS SECTOR ADDR 3	L	A02P1		1-01 *			D05-4		1		4-1/8	16
BUS SECTOR ADDR 3	L	B07J1		1-02 *			D05-4		2		1	16
BUS SECTOR ADDR 3	L	B08J1		1-03 *			D05-4					16
BUS SECTOR ADDR 3	L			1							5-1/8	16
BUS SECTOR PULSE	L	A02F1		1-01 *			D05-3		1		5-2/8	17
BUS SECTOR PULSE	L	B08N2		1-02 *			D05-3		2		1	17
BUS SECTOR PULSE	L	B07N2		1-03 *			D05-3					17
BUS SECTOR PULSE	L			1							6-2/8	17
BUS SEEK INCOMPLETE	L	A02N1		1-01 *			D05-4		1		3-3/8	18
BUS SEEK INCOMPLETE	L	A07S2		1-02 *			D05-4		2		1	18
BUS SEEK INCOMPLETE	L	A08S2		1-03 *			D05-4					18
BUS SEEK INCOMPLETE	L			1							4-3/8	18
BUS WR PROTECT STATUS	H	B04U1		1-01 *			D05-8		1		2-3/8	19
BUS WR PROTECT STATUS	H	B07P1		1-02 *			D05-8		2		1	19
BUS WR PROTECT STATUS	H	B08F1		1-03 *			D05-8					19
BUS WR PROTECT STATUS	H			1							3-3/8	19
BUS WRITE CK	H	B04F1		1-01 *			D05-8		1		2-3/8	20
BUS WRITE CK	H	B07K1		1-02 *			D05-8		2		1	20
BUS WRITE CK	H	B08K1		1-03 *			D05-8					20
BUS WRITE CK	H			1							3-3/8	20
COS POSITION	H	A05U1		1-01 *			D05-9		1		1-5/8	21
COS POSITION	H	B06R1		1-02 *			D05-9					21
COS POSITION	H			1							1-5/8	21
COUNT PULSE FWD	H	A05A1		1-01 *			D05-5		1		5-1/8	22
COUNT PULSE FWD	H	B03K1		1-02 *			D05-5					22
COUNT PULSE FWD	H			1							5-1/8	22
COUNT PULSE REV	H	A05C1		1-01 *			D05-5		1		4-3/8	23
COUNT PULSE REV	H	B03F1		1-02 *			D05-5					23
COUNT PULSE REV	H			1							4-3/8	23
CYC ADDR A	L	A07K1		1-01 *			D05-5		2		1	24
CYC ADDR A	L	A08K1		1-02 *			D05-5		1		4-4/8	24
CYC ADDR A	L	B08L1		1-03 *			D05-5					24
CYC ADDR A	L			1							5-4/8	24

RUN NAME	A/P	PIN NAME	ORDER PIN	RAY = ORDER	Q	DRAW OPT	RV RG Y	X	Z	REMARKS	NC LENGTH EXCEPTIONS FLAG	RUN NUMBER
SELECT 3	L	A08L2		1=A1 *			D05=3		2		1	91
SELECT 3	L	A07L2		1=A2 *			D05=3		1		5=7/8	91
SELECT 3	L	A02T2		1=A3 *			D05=3					91
SELECT 3	L			1							6=7/8	91
SELECT 4	L	A08M2		1=A1 *			D05=3		2		1	92
SELECT 4	L	A07M2		1=A2 *			D05=3		1		5	92
SELECT 4	L	A02U2		1=A3 *			D05=3					92
SELECT 4	L			1							6=8/8	92
SELECT/READY	L	A01H2		1=A1 *			D05=1		1		2=3/8	93
SELECT/READY	L	A04V1		1=A2 *					2		2=2/8	93
SELECT/READY	L	A02H1		1=A3 *			D05=1					93
SELECT/READY	L			1							4=5/8	93
SELECTED READ GATE	H	A01R1		1=A1 *			D05=9		1		1=3/8	94
SELECTED READ GATE	H	A02F2		1=A2 *			D05=9					94
SELECTED READ GATE	H			1							1=3/8	94
SELECTED WRITE GATE	H	A01V1		1=A1 *			D05=1		1		1=2 3	95
SELECTED WRITE GATE	H	A02V2		1=A2 *			D05=1					95
SELECTED WRITE GATE	H			1							1=2/8	95
SET UNSAFE	L	A01U2		1=A1 *			D05=1		1		2=2/8	96
SET UNSAFE	L	A04A1		1=A2 *			D05=1					96
SET UNSAFE	L			1							2=2/8	96
SIN POSITION	H	A05N1		1=A1 *			D05=9		1		2=5/8	97
SIN POSITION	H	A06D1		1=A2 *			D05=9					97
SIN POSITION	H			1							2=5/8	97
STROBE	L	A02V1		1=A1 *			D05=2		1		4=1/8	98
STROBE	L	A07H1		1=A2 *			D05=2		2		1	98
STROBE	L	A08H1		1=A3 *			D05=2					98
STROBE	L			1							5=1/8	98
UNSAFE	L	A01L2		1=A1 *			D05=1		1		2=5/8	99
UNSAFE	L	A04V2		1=A2 *			D05=1					99
UNSAFE	L			1							2=5/8	99
WRITE DATA + CLK	H	A01J1		1=A1 *			D05=1		1		3=7/8	100
WRITE DATA + CLK	H	A07F2		1=A2 *			D05=1		2		1	100
WRITE DATA + CLK	H	A08F2		1=A3 *			D05=1					100
WRITE DATA + CLK	H			1							4=7/8	100
WRITE GATE	L	A01J2		1=A1 *			D05=1		1		4=6/8	101
WRITE GATE	L	A07L2		1=A2 *			D05=1		2		1	101
WRITE GATE	L	A08L2		1=A3 *			D05=1					101
WRITE GATE	L			1							5=6/8	101
WRITE PROTECT SET	L	A02S1		1=A1 *			D05=3		1		3=3/8	102
WRITE PROTECT SET	L	A07R2		1=A2 *			D05=3		2		1	102
WRITE PROTECT SET	L	A08R2		1=A3 *			D05=3					102
WRITE PROTECT SET	L			1							4=3/8	102

RUN NAME	A/P	PIN NAME	ORDER PIN	RAY = ORDER	Q	DRAW OPT	RV RG Y	X	Z	REMARKS	NC LENGTH EXCEPTIONS FLAG	RUN NUMBER
WRITE SW OFF	L	A06M1		1=A1 *			D05=7		1		3=3/8	103
WRITE SW OFF	L	A04F1		1=A2 *			D05=7					103
WRITE SW OFF	L			1							3=3/8	103
WRITE SW ON	L	A06M1		1=A1 *			D05=7		1		3=3/8	104
WRITE SW ON	L	A04F1		1=A2 *			D05=7					104
WRITE SW ON	L			1							3=3/8	104
WRITING IND	H	A02D1		1=A1 *			D05=5		1		3=2/8	105
WRITING IND	H	A06E1		1=A2 *			D05=5					105
WRITING IND	H			1							3=2/8	105

RUN NAME	A/P	PT NAME	ORDER PIN	RAY - ORDER	Q	DRAW OPT	RV RG Y	X	Z	REMARKS	NC LENGTH EXCEPTIONS FLAG	RUN NUMBER
GND 06		A06C2		1-01 *					1		2-1/8	47
GND 06		A06T1		1-02 *					2		1-5/8	47
GND 06		R06C2		1-03 *		D05-9			1		0-1/8	47
GND 06		R06C1		1-04 *		D05-9			2		0-4/8	47
GND 06		R06E1		1-05 *		D05-9			1		0-5/8	47
GND 06		R06J1		1-06 *		D05-9			2		1-4/8	47
GND 06		R06T1		1-07 *		D05-9			1		0-1/8	47
GND 06		R06S1		1-08 *		D05-9						47
GND 06				1							7-0/8	47
GND 07		A07R2		1-01 *					1		0-1/8	48
GND 07		A07C2		1-02 *					2		1-5/8	48
GND 07		A07N1		1-03 *					1		0-1/8	48
GND 07		A07P1		1-04 *					2		0-1/8	48
GND 07		A07R1		1-05 *					1		0-1/8	48
GND 07		A07S1		1-06 *					2		0-1/8	48
GND 07		A07T1		1-07 *					1		0-4/8	48
GND 07		A07V1		1-08 *					2		1-3/8	48
GND 07		R07R2		1-09 *					1		0-1/8	48
GND 07		R07C2		1-10 *					2		0-1/8	48
GND 07		R07D1		1-11 *					1		0-1/8	48
GND 07		R07E1		1-12 *					2		1-7/8	48
GND 07		R07T1		1-13 *					1		0-4/8	48
GND 07		R07V2		1-14 *								48
GND 07				1							6-7/8	48
GND 08		A08R2		1-01 *					1		0-1/8	49
GND 08		A08C2		1-02 *					2		1-5/8	49
GND 08		A08N1		1-03 *					1		0-1/8	49
GND 08		A08P1		1-04 *					2		0-1/8	49
GND 08		A08R1		1-05 *					1		0-1/8	49
GND 08		A08S1		1-06 *					2		0-1/8	49
GND 08		A08T1		1-07 *					1		0-4/8	49
GND 08		A08V1		1-08 *					2		1-3/8	49
GND 08		R08R2		1-09 *					1		0-1/8	49
GND 08		R08C2		1-10 *					2		0-1/8	49
GND 08		R08D1		1-11 *					1		0-1/8	49
GND 08		R08E1		1-12 *					2		1-7/8	49
GND 08		R08T1		1-13 *					1		0-4/8	49
GND 08		R08V2		1-14 *								49
GND 08				1							6-7/8	49
GOOD STROBE	L	R02F1		1-01 *		D05-5			1		1-1/8	50
GOOD STROBE	L	R03D1		1-02 *		D05-5						50
GOOD STROBE	L			1							1-1/8	50
HEAD SELECT	L	A01P1		1-01 *		D05-1			1		5-2/8	51
HEAD SELECT	L	R07M2		1-02 *		D05-1			2		1	51
HEAD SELECT	L	R08H2		1-03 *		D05-1						51
HEAD SELECT	L			1							6-2/8	51
HIGH DENSITY	L	A01R2		1-01 *		D05-4			1		4-3/8	52
HIGH DENSITY	L	R07P2		1-02 *		D05-4			2		1	52
HIGH DENSITY	L	R08P2		1-03 *		D05-4						52
HIGH DENSITY	L			1							5-3/8	52

RUN NAME	A/P	PIN NAME	ORDER PIN	RAY - ORDER	Q	DRAW OPT	RV RG Y	X	Z	REMARKS	NC LENGTH EXCEPTIONS FLAG	RUN NUMBER
HOME	L	A04R1		1-01 *		D05-7			2		2-1/8	53
HOME	L	R03R1		1-02 *		D05-7			1		2-3/8	53
HOME	L	R06F1		1-03 *		D05-7						53
HOME	L			1							1-4/8	53
INDEX PULSE	L	A02R2		1-01 *		D05-3			1		1-4/8	54
INDEX PULSE	L	A04J1		1-02 *		D05-3						54
INDEX PULSE	L			1							1-4/8	54
INDEX/SECTOR	L	R02D1		1-01 *		D05-5			1		1-7/8	55
INDEX/SECTOR	L	R04H2		1-02 *		D05-5						55
INDEX/SECTOR	L			1							1-7/8	55
INNER LIMIT	H	A05R1		1-01 *		D05-2			1		3-3/8	56
INNER LIMIT	H	A03D1		1-02 *		D05-2			2		2-3/8	56
INNER LIMIT	H	R02J1		1-03 *		D05-2						56
INNER LIMIT	H			1							5-0/8	56
INTERLOCK	L	A04H1		1-01 *		D05-7			1		1-7/8	57
INTERLOCK	L	A06R1		1-02 *		D05-7						57
INTERLOCK	L			1							1-7/8	57
LIMIT	H	A05R1		1-01 *		D05-9			1		3-3/8	58
LIMIT	H	R06H1		1-02 *		D05-9						58
LIMIT	H			1							3-3/8	58
LOAD HEADS	L	R03C1		1-01 *		D05-6			1		1	59
LOAD HEADS	L	R04C1		1-02 *		D05-6						59
LOAD HEADS	L			1							1-0/8	59
LOAD IND	H	A04T1		1-01 *		D05-4			1		1-7/8	60
LOAD IND	H	A06A1		1-02 *		D05-4						60
LOAD IND	H			1							1-7/8	60
LOAD SW	L	A06K1		1-01 *		D05-7			1		3-3/8	61
LOAD SW	L	R04D1		1-02 *		D05-7						61
LOAD SW	L			1							3-3/8	61
MOVE	L	A03L1		1-01 *		D05-2			1		4-1/8	62
MOVE	L	R02P1		1-02 *		D05-2						62
MOVE	L			1							4-1/8	62
NO PROTECT	L	A01N2		1-01 *		D05-1			1		3-5/8	63
NO PROTECT	L	R04M1		1-02 *		D05-1						63
NO PROTECT	L			1							3-5/8	63
ODD DRIVE	L	A02J2		1-01 *					1		3-3/8	64
ODD DRIVE	L	R03F2		1-02 *								64
ODD DRIVE	L			1							3-3/8	64
ON	L	A02A1		1-01 *		D05-5			1		2-1/8	65
ON	L	A03M1		1-02 *		D05-5						65
ON	L			1							2-1/8	65