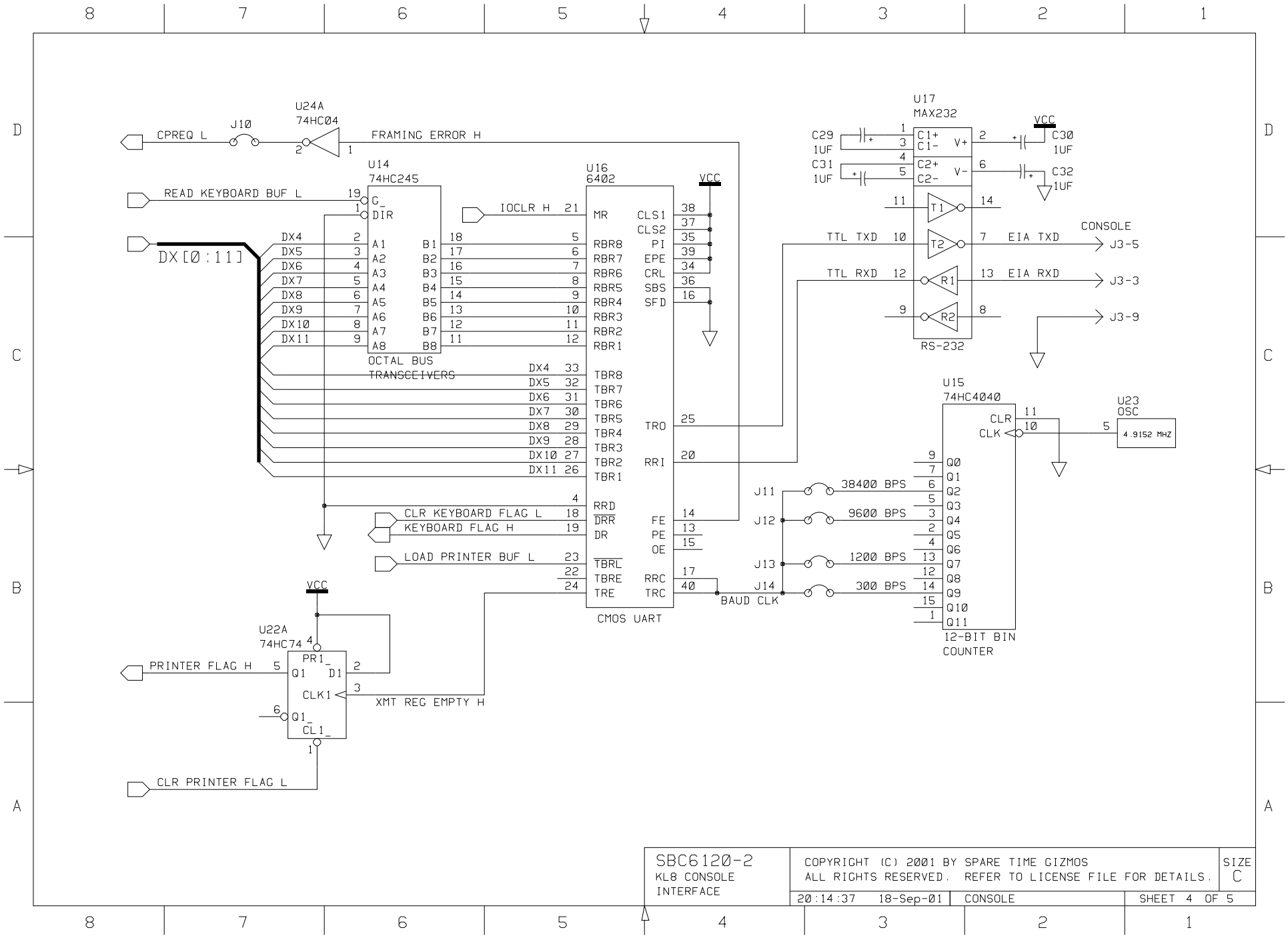

SBC6120-2 KL8 CONSOLE INTERFACE	COPYRIGHT (C) 2001 BY SPARE TIME GIZMOS ALL RIGHTS RESERVED. REFER TO LICENSE FILE FOR DETAILS.	SIZE C
	20:14:37 18-Sep-01 CONSOLE	SHEET 4 OF 5